inductair
air & water systems

High Pressure Fan Coil Units

DFCL
DFCL-ECM

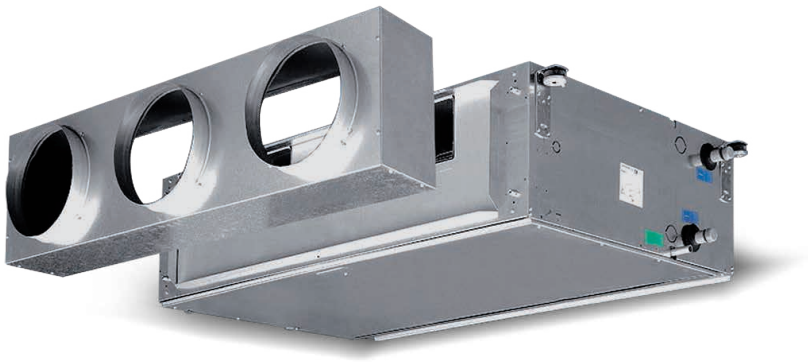

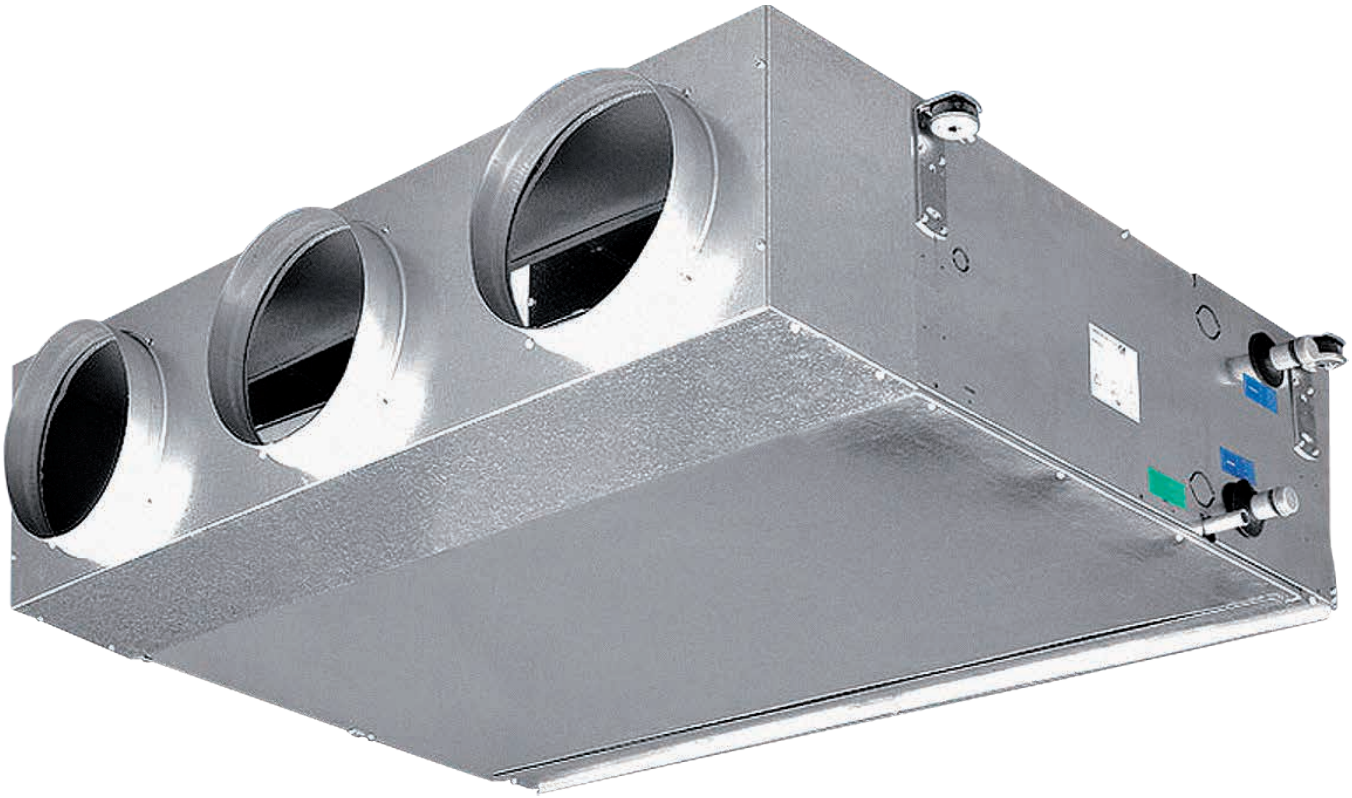

TABLE OF CONTENTS

Introduction 4

DFCL 1÷5

Construction features 5
Technical features 6
Main performances and technical characteristics 7
Cooling emission 12
Heating emission 18
Correction factor tables 22
Water side pressure drop and Operating limits 24
Dimension, weight and water content 26
Construction features 28

DFCL 6-7

Main performances and technical characteristics 29
Cooling emission 31
Heating emission 33
Available pressure and pressure drops 34
Calculation example 36
Power absorption depending on air flow 38
Water side pressure drop and Operating limits 39
Dimension, weight and water content 40
Electronic wall controls 42

DFCL 1÷7

Construction features 46

DFCL-ECM 1÷6

Technical features - 2 pipe unit 47
Technical features - 4 pipe unit 48
Main performances and technical characteristics 49
Cooling emission 54
Heating emission 60
Correction factor tables 65
Water side pressure drop and Operating limits 73
Dimension, weight and water content 75
Electronic wall controls 77

DFCL / DFCL-ECM

Controls and units MB version 79
NET software 83
Optional accessories 88

INTRODUCTION

DFCL

High pressure fan coil unit with asynchronous motor.

The **DFCL high pressure** fan coils are produced in 7 sizes.
Designed and built for concealed installations, they have small dimensions, are very silent and have a particularly interesting price in relation to their performance (elevated air flow rates and available static pressures up to 160 Pa for sizes 1-5 and 250 Pa for sizes 6-7).
They are suitable for climate control for small and medium commercial and sports environments or for large civil environments and integrate perfectly in regular false ceilings.
The sizes 1÷5 are equipped with **5 speed** fans, 3 of which are connected to the terminal board while the sizes 6-7 are equipped with **3 speed** fans.
The base models call for a 4 row coil but upon request, units with 3 row coils or additional coils (for 4 pipe systems) with one or two rows can be provided.
A complete set of accessories solves any type of system problem.

All range is compliant with the **Regulation (EU) No. 327/2011** which requires **very low electric consumption ratings** in relation to performances provided.

DFCL-ECM

High pressure fan coil unit with EC electronic motor and inverter board.

The **DFCL-ECM** high pressure fan coils are produced in 6 sizes.
Designed and built for concealed installations, they have small dimensions, are very silent and have a particularly interesting price in relation to their performance (elevated air flow rates and available static pressures up to 240 Pa).
They are suitable for climate control for small and medium commercial and sports environments or for large civil environments and integrate perfectly in regular false ceilings.
In high pressure ducted fan coils, the ability to **continuously** vary the air flow gives great regulation and control flexibility, at the same time **ensuring** excellent environmental conditions and extremely low electrical consumption.

The ECM range makes use of the excellent experience gained with the Cassette fan coils with inverter board, first in the world in production since 2009, and which have had great success on all markets.

The innovative synchronous electronic motor with permanent magnets, is controlled by an electronic board (inverter).

The air flow rate can be varied in **continuously** by means of a 1-10 V signal generated by controls or by independent control systems.
The continuous air flow control improves the acoustic comfort and allows a more punctual reply to the variation of the thermal loads and a greater stability of the requested ambient temperature.
The extreme efficiency, also at low speed, makes possible a great reduction in electric consumption (in comparison to the yet efficient DFCL motor) under normal operating conditions. The excellent values of the DFCL-ECM range have been maintained **in all working conditions**, without any resonance phenomenon at any frequency.
The full compliance with the Electromagnetic Compatibility Directive and with the other severe Standards in force is certified by an independent institute.
For the technical characteristics of the various components refer to High Pressure Fan Coil DFCL unit, except for **Electronic motor**: three phase permanent magnet electronic one that is controlled with current reconstructed according to a **BLAC** sinusoidal wave.
The inverter board that controls the motor operation is powered by 230 Volt, single-phase and, with a **switching system**, it generates a three-phase frequency modulated, wave form power supply
The electric power supply required for the machine is therefore single-phase with voltage of **230 V** and frequency of **50 - 60 Hz**.

All range is compliant with the **Regulation (EU) No. 327/2011** which requires **very low electric consumption ratings** in relation to performances provided.

CONSTRUCTION FEATURES

DFCL 1÷5 range with AC asynchronous motor

The fan coil units of the **DFCL** range allow at very economical cost to heat and/or cool all civil, industrial, commercial or sports premises.

They are designed and built for installation in the suspended ceilings, concealed or ducted.

The **DFCL 1÷5 sizes** supply a consistent air flow with static pressure up to 160 Pa.
The **DFCL 1÷5 sizes** can be equipped with a 3 or 4 row coil or with two 3+1 or 4+1 row coils (special executions 3+2 or 4+2 are on demand).

The fan assembly has 5 speeds.

Compliant with Regulation (EU) No. 327/2011.

Casing

It is made with 1,0 mm galvanized steel for sizes 1-2-3 and with 1,2 mm galvanized steel for sizes 4-5, insulated with 10 mm polyolefin (PO) foam (B-s2-d0 EN 13501-1).

Fan assembly

Consists of quiet centrifugal fans with two impellers and a directly driven single phase, five speed motor, 230 V 50 Hz, with capacitor, insulation class F.

Coil

It is manufactured from drawn copper tube and the aluminium fins are mechanically bonded onto the tube by an expansion process.

The DFCL (sizes 1÷5) is available with the combination of either 3 or 4 row coils with the possibility to add a 1 or 2 row coil (3+1, 4+1, 3+2, 4+2 versions for 4 pipe systems).
The connections are on the left side looking from the air inlet of the unit (see following picture and technical drawings on p. 26).

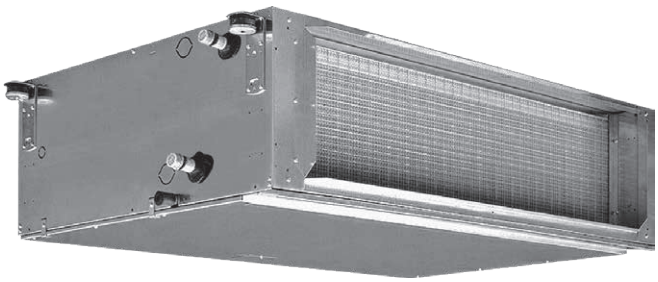

On request the connections can be moved to the other side.

The coil is not suitable for use in corrosive atmosphere or in environments where aluminium may be subject to corrosion.

Filter

The filter is made of polypropylene cellular fabric regenerating filter. The filter frame of galvanized steel is inserted into sliding guides fastened to the internal structure for easy insertion and removal of the filter.

Condensate collection tray

It is made from galvanized steel insulated with 3 mm polyolefin (PO) foam (B-s2-d0 EN 13501-1).

TECHNICAL FEATURES

4 row coil - 2 pipe units

The following standard rating conditions are used:

COOLING
Entering air temperature: + 27 °C d.b. + 19 °C w.b.
Water temperature: +7 °C E.W.T. +12 °C L.W.T.

HEATING
Entering air temperature: + 20 °C
Water temperature: +45 °C E.W.T. +40 °C L.W.T.

MODEL		DFCL 14			DFCL 24			DFCL 34			DFCL 44			DFCL 54		
Speed		1	3	5	1	3	5	1	3	5	1	3	5	1	3	5
Air flow	m^3/h	790	1125	1410	840	1410	1825	1710	2075	2440	2070	2580	3020	2740	3280	3850
Available pressure	Pa	25	50	75	15	50	80	30	50	70	35	50	67	35	50	70
Cooling total emission	kW	4,17	5,21	5,92	4,99	7,01	8,15	8,71	9,76	10,71	10,90	12,40	13,60	14,54	16,19	17,76
Cooling sensible emission	kW	3,25	4,26	5,03	3,66	5,48	6,62	6,67	7,68	8,65	8,25	9,70	10,90	11,21	12,80	14,37
Heating emission	kW	4,98	6,44	7,67	5,57	8,27	10,10	10,20	11,80	13,19	12,79	14,92	16,53	17,67	20,32	22,93
Dp Cooling	kPa	5,1	7,6	9,6	6,9	12,7	16,8	16,0	19,8	23,4	13,9	17,7	20,9	13,3	16,3	19,4
Dp Heating	kPa	5,2	8,2	11,3	6,2	17,0	18,3	15,6	23,0	24,8	13,4	17,7	21,3	14,2	18,3	22,8
Fan	W	115	155	185	170	230	285	350	420	470	390	490	570	500	617	760
Sound power outlet (Lw)	dB(A)	44	52	58	44	56	61	57	62	65	59	63	66	63	67	70
Sound power inlet + radiated (Lw)	dB(A)	47	55	60	47	59	64	60	64	67	61	65	68	65	69	72
Sound pressure level outlet (Lp) (1)	dB(A)	35	43	49	35	47	52	48	53	56	50	54	57	54	58	61
Sound pressure level inlet + radiated (Lp) (1)	dB(A)	38	46	51	38	50	55	51	55	58	52	56	59	56	60	63
Plenum code		9034200	9034200	9034200	9034200	9034200	9034200	9034220	9034220	9034220	9034230	9034230	9034230	9034240	9034240	9034240

(1) The sound pressure levels are 9 dB (A) lower than the sound power levels, apply to the reverberant field of a 100 m^3 room and a reverberation time of 0.5 sec.

4+1 row coil - 4 pipe units

The following standard rating conditions are used:

COOLING
Entering air temperature: + 27 °C d.b. + 19 °C w.b.
Water temperature: +7 °C E.W.T. +12 °C L.W.T.

HEATING
Entering air temperature: + 20 °C
Water temperature: +65 °C E.W.T. +55 °C L.W.T.

MODEL		DFCL 14+1			DFCL 24+1			DFCL 34+1			DFCL 44+1			DFCL 54+1		
Speed		1	3	5	1	3	5	1	3	5	1	3	5	1	3	5
Air flow	m^3/h	770	1090	1350	840	1390	1775	1680	2045	2390	2055	2545	2960	2700	3245	3800
Available pressure	Pa	25	50	75	15	50	80	30	50	70	35	50	67	35	50	70
Cooling total emission	kW	4,09	5,11	5,79	4,99	6,96	8,03	8,61	9,67	10,58	10,85	12,34	13,46	13,75	15,31	16,73
Cooling sensible emission	kW	3,18	4,16	4,87	3,66	5,42	6,49	6,58	7,60	8,51	8,21	9,61	10,72	10,62	12,13	13,56
Heating emission	kW	3,49	4,29	4,81	4,09	5,53	6,30	6,70	7,44	8,08	8,95	9,95	10,60	11,34	12,55	13,64
Dp Cooling	kPa	4,9	7,3	9,2	6,9	12,5	16,3	15,7	19,4	22,9	13,8	17,4	20,5	12,0	14,7	17,4
Dp Heating	kPa	9,8	14,2	17,5	12,0	20,8	26,3	12,9	15,6	18,1	24,6	29,9	33,9	27,4	32,9	38,4
Fan	W	115	155	185	170	230	285	350	420	470	390	490	570	500	617	760
Sound power outlet (Lw)	dB(A)	44	52	58	44	56	61	57	62	65	59	63	66	63	67	70
Sound power inlet + radiated (Lw)	dB(A)	47	55	60	47	59	64	60	64	67	61	65	68	65	69	72
Sound pressure level outlet (Lp) (1)	dB(A)	35	43	49	35	47	52	48	53	56	50	54	57	54	58	61
Sound pressure level inlet + radiated (Lp) (1)	dB(A)	38	46	51	38	50	55	51	55	58	52	56	59	56	60	63
Plenum code		9034200	9034200	9034200	9034200	9034200	9034200	9034220	9034220	9034220	9034230	9034230	9034230	9034240	9034240	9034240

(1) The sound pressure levels are 9 dB (A) lower than the sound power levels, apply to the reverberant field of a 100 m^3 room and a reverberation time of 0.5 sec.

MAIN PERFORMANCES AND TECHNICAL CHARACTERISTICS

3 row coil - 2 pipe units

The following standard rating conditions are used:

COOLING
Entering air temperature: + 27 °C d.b. + 19 °C w.b.
Water temperature: +7 °C E.W.T. +12 °C L.W.T.

HEATING
Entering air temperature: + 20 °C
Water temperature: +60 °C E.W.T, +50 °C L.W.T.

Available pressure: 0 Pa

MODEL		DFCL 13					DFCL 23					DFCL 33				
Speed		1	2	3	4	5	1	2	3	4	5	1	2	3	4	5
Air flow	m^3/h	995	1140	1340	1640	1925	855	1165	1550	2060	2510	1815	2080	2300	2590	2790
Cooling total emission	kW	4,05	4,37	4,78	5,32	5,78	4,32	5,21	6,14	7,17	7,90	7,43	8,00	8,44	9,00	9,36
Cooling sensible emission	kW	3,42	3,77	4,24	4,90	5,49	3,29	4,13	5,08	6,23	7,12	6,02	6,62	7,10	7,73	8,16
Heating emission	kW	7,91	8,71	9,73	11,13	12,33	7,75	9,74	11,92	14,45	16,44	14,27	15,69	16,80	18,19	19,10
Dp Cooling	kPa	7,0	8,1	9,6	11,6	13,7	8,7	12,4	16,9	22,5	27,4	18,7	21,5	23,8	26,8	28,8
Dp Heating	kPa	4,8	5,8	7,1	9,1	11,0	5,1	7,8	11,4	16,4	20,9	12,3	14,6	16,6	19,3	21,1
Fan	W	136	154	175	210	240	180	225	273	320	340	390	430	470	509	523
Sound power (Lw)	dB(A)	46	49	52	55	59	47	53	57	60	64	58	60	62	64	66
Sound pressure (Lp) (1)	dB(A)	37	40	43	46	50	38	44	48	51	55	49	51	53	55	57

MODEL		DFCL 43					DFCL 53				
Speed		1	2	3	4	5	1	2	3	4	5
Air flow	m^3/h	2265	2585	2855	3130	3400	2905	3275	3540	3975	4400
Cooling total emission	kW	9,63	10,34	10,91	11,46	11,91	12,67	13,51	14,07	14,99	15,79
Cooling sensible emission	kW	7,70	8,44	9,05	9,64	10,16	10,31	11,22	11,82	12,85	13,78
Heating emission	kW	18,06	19,82	21,21	22,56	23,65	23,64	25,71	27,14	29,35	31,42
Dp Cooling	kPa	18,4	21,2	23,5	25,7	28,0	17,2	19,6	21,2	23,9	26,5
Dp Heating	kPa	9,2	11,0	12,5	14,0	15,5	10,9	12,7	14,1	16,3	18,4
Fan	W	445	505	550	600	680	541	622	703	782	885
Sound power (Lw)	dB(A)	60	62	65	67	69	64	67	69	71	75
Sound pressure (Lp) (1)	dB(A)	51	53	56	58	60	55	58	60	62	66

(1) The sound pressure levels are 9 dB (A) lower than the sound power levels, apply to the reverberant field of a 100 m^3 room and a reverberation time of 0.5 sec.

4 row coil - 2 pipe units

The following standard rating conditions are used:

COOLING
Entering air temperature: + 27 °C d.b. + 19 °C w.b.
Water temperature: +7 °C E.W.T. +12 °C L.W.T.

HEATING
Entering air temperature: + 20 °C
Water temperature: +60 °C E.W.T, +50 °C L.W.T.

Available pressure: 0 Pa

MODEL		DFCL 14					DFCL 24					DFCL 34				
Speed		1	2	3	4	5	1	2	3	4	5	1	2	3	4	5
Air flow	m^3/h	940	1115	1315	1575	1835	855	1160	1535	2005	2360	1795	2060	2265	2550	2745
Cooling total emission	kW	4,67	5,18	5,71	6,32	6,84	5,04	6,18	7,36	8,59	9,39	8,94	9,71	10,24	10,96	11,43
Cooling sensible emission	kW	3,72	4,23	4,79	5,47	6,09	3,70	4,70	5,82	7,08	7,95	6,90	7,63	8,17	8,91	9,40
Heating emission	kW	8,76	9,95	11,22	12,77	14,20	8,77	11,13	13,76	16,69	18,71	16,43	18,20	19,50	21,22	22,36
Dp Cooling	kPa	6,0	7,3	8,8	10,6	12,4	6,7	9,8	13,5	18,1	21,4	16,3	19,0	21,0	23,9	25,8
Dp Heating	kPa	3,9	4,9	6,1	7,8	9,5	3,7	5,8	8,6	12,3	15,2	9,9	12,0	13,7	16,1	17,7
Fan	W	130	151	173	204	232	180	222	268	320	340	380	426	464	505	520
Sound power (Lw)	dB(A)	46	49	52	55	59	47	53	57	60	64	58	60	62	64	66
Sound pressure (Lp) (1)	dB(A)	37	40	43	46	50	38	44	48	51	55	49	51	53	55	57

MODEL		DFCL 44					DFCL 54				
Speed		1	2	3	4	5	1	2	3	4	5
Air flow	m^3/h	2245	2560	2820	3085	3340	2885	3240	3505	3920	4330
Cooling total emission	kW	11,47	12,40	13,12	13,81	14,38	14,99	16,07	16,80	17,95	18,93
Cooling sensible emission	kW	8,79	9,67	10,38	11,07	11,68	11,63	12,68	13,41	14,57	15,63
Heating emission	kW	20,86	23,02	24,69	26,36	27,90	27,08	29,56	31,31	33,96	36,49
Dp Cooling	kPa	14,6	16,9	18,8	20,8	22,6	13,5	15,4	16,8	19,0	21,2
Dp Heating	kPa	8,7	10,5	12,0	13,6	15,1	8,0	9,5	10,6	12,3	14,0
Fan	W	445	505	550	600	680	536	612	689	766	868
Sound power (Lw)	dB(A)	60	62	65	67	69	64	67	69	71	75
Sound pressure (Lp) (1)	dB(A)	51	53	56	58	60	55	58	60	62	66

(1) The sound pressure levels are 9 dB (A) lower than the sound power levels, apply to the reverberant field of a 100 m^3 room and a reverberation time of 0.5 sec.

3+1 row coil - 4 pipe units

The following standard rating conditions are used:

COOLING
Entering air temperature: + 27 °C d.b. + 19 °C w.b.
Water temperature: +7 °C E.W.T. +12 °C L.W.T.

HEATING
Entering air temperature: + 20 °C
Water temperature: +70 °C E.W.T., +60 °C L.W.T.

Available pressure: 0 Pa

MODEL		DFCL 13+1					DFCL 23+1					DFCL 33+1				
Speed		1	2	3	4	5	1	2	3	4	5	1	2	3	4	5
Air flow	m^3/h	940	1115	1315	1575	1835	855	1160	1535	2005	2360	1795	2060	2265	2550	2745
Cooling total emission	kW	3,92	4,32	4,74	5,21	5,64	4,32	5,20	6,11	7,07	7,66	7,38	7,96	8,37	8,92	9,30
Cooling sensible emission	kW	3,28	3,71	4,18	4,76	5,30	3,29	4,12	5,05	6,11	6,83	5,97	6,58	7,03	7,64	8,07
Heating emission	kW	4,58	5,04	5,51	6,07	6,58	4,78	5,79	6,76	7,78	8,44	8,07	8,69	9,12	9,71	10,08
Dp Cooling	kPa	6,6	7,9	9,4	11,3	13,2	8,7	12,4	16,8	22,0	25,8	18,4	21,2	23,5	26,4	28,4
Dp Heating	kPa	13,7	16,4	19,2	23,0	26,5	15,9	22,4	29,8	38,6	44,8	18,4	21,0	23,0	25,7	27,5
Fan	W	130	151	173	204	232	180	222	268	320	340	380	426	464	505	520
Sound power (Lw)	dB(A)	46	49	52	55	59	47	53	57	60	64	58	60	62	64	66
Sound pressure (Lp) (1)	dB(A)	37	40	43	46	50	38	44	48	51	55	49	51	53	55	57

MODEL		DFCL 43+1					DFCL 53+1				
Speed		1	2	3	4	5	1	2	3	4	5
Air flow	m^3/h	2245	2560	2820	3085	3340	2885	3240	3505	3920	4330
Cooling total emission	kW	9,58	10,29	10,84	11,36	11,80	12,61	13,46	14,01	14,88	15,63
Cooling sensible emission	kW	7,65	8,39	8,97	9,54	10,04	10,26	11,15	11,76	12,73	13,62
Heating emission	kW	10,53	11,32	11,93	12,50	13,04	13,42	14,30	14,92	15,85	16,73
Dp Cooling	kPa	18,3	21,0	23,2	25,4	27,5	17,1	19,3	21,0	23,5	26,1
Dp Heating	kPa	32,4	37,0	40,8	44,4	47,8	30,0	33,6	36,4	40,6	44,6
Fan	W	445	505	550	600	680	536	612	689	766	868
Sound power (Lw)	dB(A)	60	62	65	67	69	64	67	69	71	75
Sound pressure (Lp) (1)	dB(A)	51	53	56	58	60	55	58	60	62	66

(1) The sound pressure levels are 9 dB (A) lower than the sound power levels, apply to the reverberant field of a 100 m^3 room and a reverberation time of 0.5 sec.

4+1 row coil - 4 pipe units

The following standard rating conditions are used:

COOLING
Entering air temperature: + 27 °C d.b. + 19 °C w.b.
Water temperature: +7 °C E.W.T. +12 °C L.W.T.

HEATING
Entering air temperature: + 20 °C
Water temperature: +70 °C E.W.T., +60 °C L.W.T.

Available pressure: 0 Pa

MODEL		DFCL 14+1					DFCL 24+1					DFCL 34+1				
Speed		1	2	3	4	5	1	2	3	4	5	1	2	3	4	5
Air flow	m^3/h	910	1090	1290	1530	1775	850	1155	1520	1965	2285	1780	2040	2235	2510	2700
Cooling total emission	kW	4,57	5,11	5,65	6,22	6,75	5,03	6,17	7,32	8,50	9,23	8,90	9,65	10,17	10,85	11,32
Cooling sensible emission	kW	3,62	4,16	4,72	5,35	5,96	3,69	4,69	5,77	6,97	7,77	6,86	7,58	8,10	8,80	9,29
Heating emission	kW	4,49	4,98	5,46	5,99	6,47	4,76	5,76	6,73	7,71	8,30	8,03	8,64	9,07	9,64	9,99
Dp Cooling	kPa	5,8	7,1	8,6	10,3	12,0	6,6	9,7	13,4	17,7	20,7	16,1	18,8	20,7	23,5	25,4
Dp Heating	kPa	15,3	18,4	21,8	25,7	29,6	15,7	22,3	29,6	37,7	43,5	18,2	20,8	22,7	25,3	27,1
Fan	W	127	149	170	199	226	176	218	262	310	330	375	422	458	499	515
Sound power (Lw)	dB(A)	46	49	52	55	59	47	53	57	60	64	58	60	62	64	66
Sound pressure (Lp) (1)	dB(A)	37	40	43	46	50	38	44	48	51	55	49	51	53	55	57

MODEL		DFCL 44+1					DFCL 54+1				
Speed		1	2	3	4	5	1	2	3	4	5
Air flow	m^3/h	2225	2535	2790	3055	3295	2865	3210	3475	3875	4265
Cooling total emission	kW	11,42	12,34	13,04	13,74	14,29	14,93	15,98	16,74	17,83	18,80
Cooling sensible emission	kW	8,74	9,61	10,30	11,00	11,58	11,58	12,59	13,34	14,45	15,48
Heating emission	kW	10,50	11,27	11,86	12,44	12,95	13,37	14,25	14,85	15,77	16,58
Dp Cooling	kPa	14,5	16,7	18,6	20,6	22,3	13,4	15,2	16,7	18,8	20,9
Dp Heating	kPa	32,2	36,7	40,3	43,9	47,2	29,7	33,3	36,1	40,2	44,1
Fan	W	440	500	542	599	670	530	604	678	754	851
Sound power (Lw)	dB(A)	60	62	65	67	69	64	67	69	71	75
Sound pressure (Lp) (1)	dB(A)	51	53	56	58	60	55	58	60	62	66

(1) The sound pressure levels are 9 dB (A) lower than the sound power levels, apply to the reverberant field of a 100 m^3 room and a reverberation time of 0.5 sec.

4+2 row coil - 4 pipe units

The following standard rating conditions are used:

COOLING
Entering air temperature: + 27 °C d.b. + 19 °C w.b.
Water temperature: +7 °C E.W.T. +12 °C L.W.T.

HEATING
Entering air temperature: + 20 °C
Water temperature: +70 °C E.W.T., +60 °C L.W.T.

Available pressure: 0 Pa

MODEL		DFCL 14+2					DFCL 24+2					DFCL 34+2				
Speed		1	2	3	4	5	1	2	3	4	5	1	2	3	4	5
Air flow	m^3/h	875	1055	1260	1470	1695	845	1145	1505	1910	2190	1765	2010	2195	2455	2645
Cooling total emission	kW	4,46	5,00	5,57	6,08	6,60	5,01	6,14	7,28	8,36	9,02	8,86	9,57	10,07	10,73	11,20
Cooling sensible emission	kW	3,51	4,05	4,63	5,19	5,78	3,67	4,67	5,74	6,83	7,54	6,82	7,50	7,99	8,67	9,16
Heating emission	kW	8,56	9,72	10,92	12,06	13,17	9,14	11,35	13,67	15,95	17,37	16,19	17,63	18,66	20,02	20,98
Dp Cooling	kPa	5,5	6,8	8,3	9,9	11,4	6,6	9,6	13,2	17,2	19,8	16,0	18,4	20,3	22,9	24,8
Dp Heating	kPa	13,2	16,7	20,8	24,8	29,3	12,3	18,4	26,1	34,6	40,6	18,0	21,2	23,5	26,8	29,2
Fan	W	124	145	168	193	218	173	212	257	310	330	369	414	449	489	507
Sound power (Lw)	dB(A)	46	49	52	55	59	47	53	57	60	64	58	60	62	64	66
Sound pressure (Lp) (1)	dB(A)	37	40	43	46	50	38	44	48	51	55	49	51	53	55	57

MODEL		DFCL 44+2					DFCL 54+2				
Speed		1	2	3	4	5	1	2	3	4	5
Air flow	m^3/h	2205	2500	2745	3005	3230	2825	3165	3430	3810	4170
Cooling total emission	kW	11,36	12,24	12,92	13,60	14,14	14,83	15,87	16,62	17,64	18,55
Cooling sensible emission	kW	8,69	9,52	10,19	10,87	11,42	11,47	12,47	13,22	14,27	15,22
Heating emission	kW	20,93	22,77	24,21	25,66	26,87	26,37	28,46	29,97	32,07	33,94
Dp Cooling	kPa	14,3	16,5	18,3	20,2	21,8	13,2	15,0	16,4	18,5	20,4
Dp Heating	kPa	27,2	31,8	35,6	39,6	43,3	27,4	31,6	34,8	39,4	43,7
Fan	W	434	489	528	587	650	521	593	662	737	828
Sound power (Lw)	dB(A)	60	62	65	67	69	64	67	69	71	75
Sound pressure (Lp) (1)	dB(A)	51	53	56	58	60	55	58	60	62	66

(1) The sound pressure levels are 9 dB (A) lower than the sound power levels, apply to the reverberant field of a 100 m^3 room and a reverberation time of 0.5 sec.

COOLING EMISSION

3 row coil units

Entering air temperature: 27 °C - R.H.: 50% - Available pressure: 0 Pa

				WT: 7 / 12 °C				WT: 8 / 13 °C				WT: 10 / 15 °C				WT: 12 / 17 °C			
			Qv	Pc	Ps	Qw	Dp(c)	Pc	Ps	Qw	Dp(c)	Pc	Ps	Qw	Dp(c)	Pc	Ps	Qw	Dp(c)
Model	Vn		m^3/h	kW	kW	l/h	kPa	kW	kW	l/h	kPa	kW	kW	l/h	kPa	kW	kW	l/h	kPa
DFCL 13	5	MAX	1925	6,52	5,47	1122	15,4	5,77	5,32	992	12,7	4,64	4,54	797	8,3	3,66	3,59	630	5,2
	4		1640	5,90	4,84	1015	13,3	5,31	4,76	914	10,9	4,24	4,15	729	7,0	3,33	3,26	572	4,4
	3	MED	1340	5,32	4,22	914	10,9	4,76	4,11	819	8,9	3,77	3,70	649	5,7	2,94	2,88	505	3,5
	2		1140	4,87	3,77	837	9,3	4,36	3,66	749	7,5	3,44	3,37	591	4,8	2,65	2,60	457	2,9
	1	MIN	995	4,51	3,43	776	8,1	4,03	3,32	694	6,5	3,16	3,10	544	4,1	2,43	2,38	418	2,5
DFCL 23	5	MAX	2510	8,89	7,13	1529	30,9	7,99	7,01	1374	25,3	6,42	6,29	1104	16,6	5,07	4,96	871	10,5
	4		2060	8,02	6,23	1379	25,6	7,22	6,11	1241	20,9	5,75	5,64	990	13,5	4,51	4,42	775	8,4
	3	MED	1550	6,90	5,15	1187	19,3	6,19	5,00	1064	15,7	4,88	4,74	840	10,0	3,78	3,70	650	6,1
	2		1165	5,88	4,23	1011	14,3	5,25	4,07	902	11,6	4,11	3,80	707	7,2	3,14	3,08	541	4,3
	1	MIN	855	4,87	3,40	837	10,1	4,35	3,25	748	8,1	3,37	2,97	580	5,0	2,56	2,50	440	2,9
DFCL 33	5	MAX	2790	10,56	8,23	1816	32,6	9,51	8,09	1636	26,7	7,61	7,46	1309	17,4	5,98	5,86	1029	10,9
	4		2590	10,16	7,83	1748	30,5	9,15	7,68	1573	24,9	7,29	7,15	1254	16,1	5,72	5,60	983	10,0
	3	MED	2300	9,56	7,24	1644	27,1	8,59	7,07	1477	22,1	6,82	6,68	1172	14,2	5,32	5,21	915	8,7
	2		2080	9,06	6,76	1558	24,6	8,14	6,59	1400	19,9	6,43	6,26	1107	12,7	5,00	4,90	859	7,8
	1	MIN	1815	8,41	6,18	1447	21,3	7,53	5,98	1295	17,3	5,94	5,64	1021	11,0	4,59	4,50	789	6,6
DFCL 43	5	MAX	3400	13,60	10,43	2340	32,2	12,24	10,23	2105	26,3	9,76	9,57	1679	17,1	7,65	7,50	1316	10,6
	4		3130	13,03	9,87	2240	29,7	11,71	9,65	2014	24,3	9,31	9,12	1601	15,6	7,27	7,13	1251	9,6
	3	MED	2855	12,21	9,10	2100	26,4	10,97	8,87	1887	21,5	8,68	8,43	1493	13,7	6,75	6,61	1161	8,4
	2		2585	11,58	8,53	1991	23,9	10,38	8,28	1786	19,4	8,20	7,83	1410	12,3	6,35	6,22	1092	7,5
	1	MIN	2265	10,68	7,74	1837	20,5	9,56	7,46	1645	16,6	7,52	7,00	1293	10,5	5,79	5,67	995	6,3
DFCL 53	5	MAX	4400	17,85	14,02	3070	30,0	16,02	13,66	2755	24,6	12,75	12,50	2193	15,8	9,97	9,77	1715	9,8
	4		3975	16,90	13,07	2907	27,2	15,17	12,71	2609	22,2	12,04	11,80	2071	14,2	9,37	9,19	1612	8,7
	3	MED	3540	15,88	12,06	2731	24,2	14,24	11,70	2449	19,7	11,25	11,02	1934	12,6	8,71	8,53	1498	7,6
	2		3275	15,22	11,43	2617	22,4	13,64	11,06	2345	18,2	10,75	10,38	1849	11,5	8,29	8,13	1427	6,9
	1	MIN	2905	14,23	10,51	2447	19,7	12,73	10,14	2189	16,0	10,01	9,46	1721	10,1	7,68	7,53	1321	6,0

WT: Water temperature
Vn: Nominal speeds
Qv: Air flow
Pc: Cooling total emission
Ps: Cooling sensible emission
Qw: Water flow rate
Dp(c): Dp Cooling

Note: the power absorption (Watt) at p. 22 must be subtracted from the total and sensible cooling emission.

3 row coil units

Entering air temperature: 26 °C - R.H.: 50% - Available pressure: 0 Pa

Model	Vn		Qv	WT: 7 / 12 °C				WT: 8 / 13 °C				WT: 10 / 15 °C				WT: 12 / 17 °C			
				Pc	Ps	Qw	Dp(c)	Pc	Ps	Qw	Dp(c)	Pc	Ps	Qw	Dp(c)	Pc	Ps	Qw	Dp(c)
			m³/h	kW	kW	l/h	kPa	kW	kW	l/h	kPa	kW	kW	l/h	kPa	kW	kW	l/h	kPa
DFCL 13	5	MAX	1925	5,74	5,30	988	12,6	5,17	5,07	889	10,3	4,13	4,04	710	6,7	3,59	3,52	617	5,0
	4		1640	5,29	4,73	909	10,8	4,74	4,64	815	8,8	3,76	3,69	647	5,6	3,25	3,19	559	4,2
	3	MED	1340	4,74	4,10	816	8,9	4,23	4,00	728	7,1	3,34	3,27	574	4,5	2,80	2,74	481	3,2
	2		1140	4,33	3,65	744	7,5	3,86	3,55	665	6,0	3,02	2,96	520	3,8	2,41	2,37	415	2,5
	1	MIN	995	4,01	3,31	691	6,5	3,56	3,20	613	5,2	2,78	2,73	479	3,2	2,13	2,09	367	2,0
DFCL 23	5	MAX	2510	7,97	6,99	1370	25,3	7,16	6,88	1232	20,6	5,72	5,60	984	13,3	4,66	4,56	801	9,1
	4		2060	7,18	6,09	1234	20,8	6,43	5,96	1106	16,9	5,10	5,00	877	10,8	3,98	3,90	684	6,6
	3	MED	1550	6,15	4,99	1057	15,6	5,48	4,85	943	12,6	4,30	4,22	740	7,9	3,32	3,25	570	4,7
	2		1165	5,22	4,07	898	11,5	4,65	3,92	799	9,2	3,60	3,53	620	5,7	2,74	2,69	472	3,3
	1	MIN	855	4,32	3,24	743	8,1	3,83	3,10	659	6,4	2,95	2,84	507	3,9	2,21	2,17	381	2,2
DFCL 33	5	MAX	2790	9,47	8,06	1629	26,7	8,49	7,91	1461	21,7	6,76	6,63	1163	13,9	5,28	5,18	909	8,5
	4		2590	9,11	7,66	1566	24,8	8,16	7,49	1403	20,1	6,47	6,34	1113	12,8	5,05	4,94	868	7,8
	3	MED	2300	8,55	7,05	1470	22,1	7,65	6,88	1316	17,8	6,03	5,91	1038	11,3	4,68	4,59	805	6,8
	2		2080	8,09	6,57	1391	19,9	7,23	6,40	1244	16,0	5,68	5,56	977	10,1	4,39	4,30	755	6,0
	1	MIN	1815	7,50	5,97	1290	17,3	6,69	5,79	1151	13,9	5,23	5,12	899	8,6	4,02	3,94	691	5,1
DFCL 43	5	MAX	3400	12,18	10,20	2094	26,3	10,91	9,98	1877	21,3	8,67	8,49	1491	13,6	6,75	6,62	1161	8,3
	4		3130	11,66	9,63	2005	24,2	10,44	9,41	1796	19,6	8,25	8,08	1419	12,4	6,41	6,28	1102	7,5
	3	MED	2855	10,91	8,85	1877	21,4	9,76	8,62	1678	17,2	7,67	7,52	1319	10,9	5,93	5,81	1020	6,5
	2		2585	10,34	8,27	1779	19,3	9,23	8,03	1588	15,6	7,23	7,09	1244	9,7	5,57	5,46	958	5,8
	1	MIN	2265	9,51	7,45	1636	16,6	8,48	7,20	1458	13,3	6,61	6,48	1137	8,2	5,06	4,95	869	4,8
DFCL 53	5	MAX	4400	15,96	13,63	2744	24,5	14,29	13,29	2458	19,8	11,30	11,08	1944	12,6	8,79	8,62	1512	8,0
	4		3975	15,12	12,69	2601	22,2	13,52	12,34	2326	17,9	10,64	10,43	1831	11,3	8,23	8,07	1416	6,8
	3	MED	3540	14,18	11,68	2439	19,7	12,64	11,31	2175	15,8	9,92	9,72	1706	9,9	7,64	7,49	1315	5,9
	2		3275	13,58	11,05	2336	18,1	12,09	10,67	2080	14,6	9,47	9,28	1628	9,1	7,27	7,12	1250	5,4
	1	MIN	2905	12,68	10,13	2181	15,9	11,30	9,77	1944	12,8	8,79	8,61	1512	7,9	6,71	6,58	1155	4,6

WT: Water temperature
Vn: Nominal speeds
Qv: Air flow
Pc: Cooling total emission
Ps: Cooling sensible emission
Qw: Water flow rate
Dp(c): Dp Cooling

Note: the power absorption (Watt) at p. 22 must be subtracted from the total and sensible cooling emission.

3 row coil units

Entering air temperature: 25 °C - R.H.: 50% - Available pressure: 0 Pa

Model	Vn		Qv	WT: 7 / 12 °C				WT: 8 / 13 °C				WT: 10 / 15 °C				WT: 12 / 17 °C			
				Pc	Ps	Qw	Dp(c)	Pc	Ps	Qw	Dp(c)	Pc	Ps	Qw	Dp(c)	Pc	Ps	Qw	Dp(c)
			m^3/h	kW	kW	l/h	kPa	kW	kW	l/h	kPa	kW	kW	l/h	kPa	kW	kW	l/h	kPa
DFCL 13	5	MAX	1925	5,15	5,05	886	10,3	4,62	4,53	795	8,3	3,67	3,60	632	5,3	3,22	3,16	554	4,1
	4		1640	4,72	4,62	813	8,8	4,22	4,14	726	7,1	3,34	3,27	574	4,5	2,92	2,86	502	3,4
	3	MED	1340	4,23	3,98	727	7,1	3,76	3,69	647	5,7	2,95	2,89	507	3,5	2,57	2,52	442	2,7
	2		1140	3,85	3,54	663	6,0	3,42	3,35	588	4,8	2,66	2,61	458	2,9	2,31	2,27	398	2,2
	1	MIN	995	3,56	3,19	612	5,2	3,15	3,09	542	4,1	2,44	2,39	420	2,5	2,12	2,07	364	1,9
DFCL 23	5	MAX	2510	7,14	6,84	1228	20,6	6,40	6,27	1101	16,7	5,08	4,98	874	10,7	4,43	4,34	761	8,2
	4		2060	6,42	5,94	1104	16,9	5,73	5,62	986	13,6	4,51	4,42	776	8,6	3,92	3,84	674	6,5
	3	MED	1550	5,47	4,83	941	12,6	4,86	4,69	836	10,0	3,79	3,71	652	6,2	3,26	3,19	560	4,6
	2		1165	4,62	3,91	795	9,2	4,09	3,77	704	7,3	3,15	3,09	543	4,4	2,68	2,63	462	3,2
	1	MIN	855	3,82	3,10	656	6,4	3,36	2,96	579	5,1	2,56	2,51	441	3,0	2,09	2,04	359	2,0
DFCL 33	5	MAX	2790	8,48	7,88	1458	21,7	7,58	7,42	1303	17,5	5,99	5,87	1030	11,1	5,20	5,09	894	8,4
	4		2590	8,14	7,47	1399	20,1	7,27	7,12	1250	16,2	5,73	5,62	986	10,2	4,96	4,86	853	7,7
	3	MED	2300	7,61	6,85	1310	17,8	6,79	6,66	1168	14,3	5,33	5,22	917	8,9	4,60	4,50	790	6,6
	2		2080	7,20	6,38	1239	16,0	6,41	6,20	1103	12,8	5,01	4,91	862	7,9	4,31	4,22	741	5,9
	1	MIN	1815	6,66	5,77	1146	13,9	5,92	5,60	1018	11,1	4,60	4,51	791	6,8	3,93	3,85	677	4,9
DFCL 43	5	MAX	3400	10,89	9,95	1872	21,3	9,73	9,54	1674	17,2	7,68	7,52	1320	10,8	6,63	6,50	1141	8,1
	4		3130	10,39	9,37	1788	19,5	9,28	9,09	1596	15,7	7,30	7,15	1255	9,8	6,28	6,16	1081	7,4
	3	MED	2855	9,70	8,58	1669	17,2	8,64	8,35	1486	13,8	6,77	6,63	1164	8,5	5,81	5,69	999	6,3
	2		2585	9,19	8,00	1581	15,6	8,17	7,76	1405	12,4	6,37	6,24	1096	7,6	5,45	5,34	937	5,6
	1	MIN	2265	8,44	7,18	1451	13,3	7,49	6,94	1288	10,5	5,80	5,68	997	6,4	4,93	4,83	848	4,6
DFCL 53	5	MAX	4400	14,26	13,24	2453	19,8	12,73	12,47	2189	15,9	10,00	9,80	1721	10,0	8,77	8,60	1509	7,7
	4		3975	13,46	12,28	2316	17,8	12,00	11,76	2064	14,3	9,40	9,21	1616	8,9	8,22	8,06	1414	6,8
	3	MED	3540	12,64	11,29	2174	15,8	11,21	10,93	1929	12,6	8,74	8,57	1503	7,8	7,63	7,47	1312	5,9
	2		3275	12,06	10,65	2074	14,6	10,70	10,29	1841	11,6	8,33	8,16	1432	7,1	7,24	7,10	1246	5,3
	1	MIN	2905	11,25	9,74	1935	12,8	9,96	9,38	1713	10,1	7,71	7,56	1326	6,1	6,68	6,55	1149	4,6

WT: Water temperature
Vn: Nominal speeds
Qv: Air flow
Pc: Cooling total emission
Ps: Cooling sensible emission
Qw: Water flow rate
Dp(c): Dp Cooling

Note: the power absorption (Watt) at p. 22 must be subtracted from the total and sensible cooling emission.

4 row coil units

Entering air temperature: 27 °C - R.H.: 50% - Available pressure: 0 Pa

				WT: 7 / 12 °C				WT: 8 / 13 °C				WT: 10 / 15 °C				WT: 12 / 17 °C			
			Qv	Pc	Ps	Qw	Dp(c)	Pc	Ps	Qw	Dp(c)	Pc	Ps	Qw	Dp(c)	Pc	Ps	Qw	Dp(c)
Model	Vn		m³/h	kW	kW	l/h	kPa	kW	kW	l/h	kPa	kW	kW	l/h	kPa	kW	kW	l/h	kPa
DFCL 14	5	MAX	1835	7,64	6,10	1313	14,1	6,84	5,92	1177	11,4	5,40	5,29	928	7,3	4,18	4,10	720	4,5
	4		1575	7,03	5,48	1209	12,1	6,28	5,29	1080	9,8	4,94	4,84	849	6,2	3,81	3,73	655	3,7
	3	MED	1315	6,35	4,82	1092	10,1	5,66	4,63	974	8,1	4,43	4,31	762	5,1	3,39	3,32	583	3,0
	2		1115	5,78	4,28	994	8,4	5,15	4,10	885	6,8	4,00	3,77	687	4,2	3,04	2,98	523	2,5
	1	MIN	940	5,20	3,78	895	7,0	4,64	3,60	798	5,6	3,59	3,29	617	3,4	2,71	2,65	466	2,0
DFCL 24	5	MAX	2360	10,49	8,01	1804	24,5	9,41	7,77	1619	19,9	7,44	7,29	1279	12,7	5,76	5,64	991	7,7
	4		2005	9,61	7,16	1652	20,8	8,60	6,91	1479	16,8	6,76	6,46	1163	10,6	5,20	5,10	895	6,4
	3	MED	1535	8,25	5,94	1419	15,6	7,37	5,69	1267	12,6	5,75	5,24	989	7,8	4,38	4,29	753	4,6
	2		1160	6,95	4,85	1195	11,4	6,20	4,61	1067	9,1	4,81	4,19	827	5,6	3,62	3,55	622	3,2
	1	MIN	855	5,68	3,85	977	7,8	5,06	3,64	871	6,3	3,90	3,26	672	3,8	2,92	2,86	502	2,2
DFCL 34	5	MAX	2745	12,86	9,58	2213	29,5	11,53	9,27	1982	24,0	9,09	8,70	1564	15,2	7,02	6,88	1207	9,2
	4		2550	12,35	9,11	2124	27,4	11,06	8,79	1902	22,3	8,71	8,22	1497	14,0	6,71	6,57	1153	8,4
	3	MED	2265	11,57	8,39	1990	24,2	10,34	8,07	1778	19,6	8,11	7,50	1396	12,3	6,22	6,10	1070	7,3
	2		2060	10,95	7,85	1883	21,9	9,79	7,54	1685	17,7	7,65	6,96	1316	11,1	5,85	5,73	1006	6,5
	1	MIN	1795	10,10	7,13	1737	18,8	9,03	6,82	1553	15,2	7,03	6,25	1210	9,4	5,34	5,23	918	5,5
DFCL 44	5	MAX	3340	16,41	12,11	2823	26,5	14,70	11,70	2529	21,4	11,57	10,94	1990	13,6	8,91	8,73	1533	8,1
	4		3085	15,69	11,46	2699	24,3	14,05	11,04	2416	19,7	11,03	10,29	1898	12,4	8,47	8,30	1457	7,4
	3	MED	2820	14,67	10,55	2523	21,5	13,13	10,14	2258	17,3	10,27	9,38	1766	10,8	7,85	7,69	1350	6,4
	2		2560	13,86	9,85	2383	19,3	12,39	9,44	2132	15,6	9,67	8,69	1664	9,7	7,36	7,22	1266	5,7
	1	MIN	2245	12,72	8,89	2187	16,4	11,35	8,48	1952	13,2	8,82	7,74	1518	8,2	6,69	6,56	1151	4,8
DFCL 54	5	MAX	4330	21,34	16,03	3671	24,4	19,12	15,43	3288	19,7	15,01	14,33	2581	12,4	11,53	11,30	1984	7,4
	4		3920	20,19	14,95	3473	22,0	18,06	14,34	3106	17,8	14,14	13,26	2433	11,1	10,82	10,61	1861	6,6
	3	MED	3505	18,94	13,80	3258	19,5	16,92	13,20	2911	15,7	13,20	12,12	2270	9,8	10,06	9,86	1730	5,8
	2		3240	18,06	13,03	3106	17,8	16,13	12,44	2775	14,4	12,58	11,39	2164	9,0	9,54	9,35	1641	5,2
	1	MIN	2885	16,85	11,99	2899	15,7	15,03	11,40	2585	12,6	11,71	10,39	2014	7,8	8,83	8,66	1519	4,5

WT: Water temperature
Vn: Nominal speeds
Qv: Air flow
Pc: Cooling total emission
Ps: Cooling sensible emission
Qw: Water flow rate
Dp(c): Dp Cooling

Note: the power absorption (Watt) at p. 22 must be subtracted from the total and sensible cooling emission.

4 row coil units

Entering air temperature: 26 °C - R.H.: 50% - Available pressure: 0 Pa

Model	Vn		Qv	WT: 7 / 12 °C				WT: 8 / 13 °C				WT: 10 / 15 °C				WT: 12 / 17 °C			
				Pc	Ps	Qw	Dp(c)	Pc	Ps	Qw	Dp(c)	Pc	Ps	Qw	Dp(c)	Pc	Ps	Qw	Dp(c)
			m^3/h	kW	kW	l/h	kPa	kW	kW	l/h	kPa	kW	kW	l/h	kPa	kW	kW	l/h	kPa
DFCL 14	5	MAX	1835	6,80	5,90	1170	11,4	6,07	5,73	1044	9,2	4,76	4,67	819	5,8	4,06	3,98	699	4,3
	4		1575	6,27	5,29	1078	9,8	5,56	5,10	957	7,8	4,34	4,25	747	4,9	3,53	3,46	608	3,3
	3	MED	1315	5,64	4,63	970	8,1	5,01	4,45	861	6,5	3,88	3,81	668	4,0	3,00	2,94	516	2,5
	2		1115	5,12	4,10	881	6,7	4,54	3,92	781	5,4	3,50	3,43	601	3,3	2,64	2,59	455	1,9
	1	MIN	940	4,61	3,60	793	5,6	4,08	3,43	701	4,4	3,13	3,06	538	2,6	2,35	2,30	404	1,5
DFCL 24	5	MAX	2360	9,38	7,76	1613	19,9	8,36	7,52	1438	16,0	6,57	6,43	1129	10,0	5,06	4,96	870	6,0
	4		2005	8,55	6,90	1471	16,8	7,62	6,66	1311	13,4	5,94	5,82	1022	8,3	4,55	4,46	782	4,9
	3	MED	1535	7,33	5,69	1261	12,5	6,51	5,45	1120	10,0	5,03	4,93	865	6,1	3,81	3,73	655	3,5
	2		1160	6,17	4,62	1061	9,1	5,46	4,39	939	7,2	4,18	3,99	720	4,3	3,13	3,07	539	2,4
	1	MIN	855	5,03	3,65	866	6,2	4,45	3,45	766	4,9	3,39	3,09	583	2,9	2,51	2,46	431	1,6
DFCL 34	5	MAX	2745	11,47	9,26	1973	24,0	10,22	8,95	1759	19,3	8,01	7,85	1377	12,0	6,15	6,03	1058	7,1
	4		2550	11,01	8,79	1895	22,2	9,82	8,48	1688	17,8	7,66	7,51	1318	11,0	5,87	5,75	1009	6,5
	3	MED	2265	10,29	8,07	1770	19,5	9,16	7,76	1576	15,7	7,12	6,98	1224	9,6	5,42	5,31	932	5,6
	2		2060	9,74	7,54	1676	17,6	8,66	7,23	1490	14,1	6,70	6,57	1153	8,6	5,09	4,99	875	5,0
	1	MIN	1795	8,97	6,82	1543	15,1	7,97	6,52	1371	12,1	6,14	5,98	1057	7,3	4,64	4,55	798	4,2
DFCL 44	5	MAX	3340	14,62	11,68	2514	21,3	13,04	11,28	2243	17,1	10,17	9,96	1749	10,6	7,79	7,63	1339	6,3
	4		3085	13,97	11,03	2403	19,6	12,43	10,62	2138	15,7	9,68	9,49	1665	9,7	7,39	7,24	1271	5,7
	3	MED	2820	13,06	10,13	2246	17,3	11,61	9,73	1996	13,8	9,00	8,82	1548	8,5	6,84	6,70	1176	4,9
	2		2560	12,31	9,43	2118	15,5	10,94	9,03	1881	12,4	8,45	8,28	1454	7,5	6,40	6,27	1100	4,3
	1	MIN	2245	11,29	8,49	1942	13,2	10,01	8,09	1722	10,5	7,70	7,40	1325	6,3	5,79	5,68	997	3,6
DFCL 54	5	MAX	4330	19,04	15,42	3275	19,7	16,94	14,83	2913	15,8	13,19	12,93	2269	9,7	10,08	9,88	1733	5,7
	4		3920	17,97	14,33	3090	17,7	15,99	13,75	2750	14,1	12,41	12,16	2135	8,7	9,43	9,25	1623	5,0
	3	MED	3505	16,83	13,19	2894	15,6	14,95	12,62	2571	12,5	11,55	11,32	1987	7,6	8,75	8,58	1506	4,4
	2		3240	16,06	12,45	2763	14,3	14,26	11,89	2453	11,4	11,00	10,78	1892	6,9	8,29	8,13	1426	4,0
	1	MIN	2885	14,95	11,41	2572	12,6	13,25	10,86	2280	10,0	10,18	9,89	1752	6,0	7,65	7,50	1316	3,4

WT: Water temperature
Vn: Nominal speeds
Qv: Air flow
Pc: Cooling total emission
Ps: Cooling sensible emission
Qw: Water flow rate
Dp(c): Dp Cooling

Note: the power absorption (Watt) at p. 22 must be subtracted from the total and sensible cooling emission.

4 row coil units

Entering air temperature: 25 °C - R.H.: 50% - Available pressure: 0 Pa

Model	Vn		Qv	WT: 7 / 12 °C				WT: 8 / 13 °C				WT: 10 / 15 °C				WT: 12 / 17 °C			
				Pc	Ps	Qw	Dp(c)	Pc	Ps	Qw	Dp(c)	Pc	Ps	Qw	Dp(c)	Pc	Ps	Qw	Dp(c)
			m³/h	kW	kW	l/h	kPa	kW	kW	l/h	kPa	kW	kW	l/h	kPa	kW	kW	l/h	kPa
DFCL 14	5	MAX	1835	6,05	5,70	1040	9,2	5,38	5,27	925	7,4	4,20	4,12	722	4,5	3,72	3,64	639	3,5
	4		1575	5,54	5,08	953	7,9	4,92	4,82	846	6,2	3,82	3,74	656	3,8	3,36	3,30	579	2,9
	3	MED	1315	4,99	4,44	859	6,4	4,41	4,27	759	5,1	3,40	3,33	585	3,1	2,98	2,92	512	2,3
	2		1115	4,52	3,91	777	5,4	3,99	3,75	686	4,2	3,05	2,99	525	2,5	2,66	2,61	457	1,9
	1	MIN	940	4,07	3,43	699	4,4	3,57	3,27	614	3,4	2,72	2,67	468	2,0	2,36	2,31	405	1,5
DFCL 24	5	MAX	2360	8,34	7,50	1434	15,9	7,41	7,26	1275	12,8	5,78	5,67	994	7,8	5,05	4,95	869	6,0
	4		2005	7,60	6,64	1306	13,4	6,74	6,41	1159	10,7	5,22	5,11	898	6,5	4,53	4,44	779	4,8
	3	MED	1535	6,48	5,44	1115	10,0	5,73	5,21	985	7,9	4,39	4,30	755	4,7	3,77	3,69	648	3,4
	2		1160	5,44	4,39	935	7,2	4,79	4,18	824	5,7	3,63	3,56	625	3,3	2,98	2,92	512	2,2
	1	MIN	855	4,43	3,45	762	4,9	3,89	3,26	669	3,8	2,93	2,87	504	2,2	2,23	2,18	383	1,3
DFCL 34	5	MAX	2745	10,20	8,93	1755	19,3	9,05	8,63	1557	15,3	7,05	6,90	1212	9,4	6,11	5,98	1050	7,0
	4		2550	9,77	8,45	1680	17,8	8,68	8,16	1493	14,1	6,73	6,59	1157	8,6	5,81	5,70	1000	6,4
	3	MED	2265	9,12	7,74	1568	15,6	8,08	7,45	1390	12,4	6,23	6,11	1072	7,5	5,36	5,25	922	5,5
	2		2060	8,63	7,22	1484	14,1	7,63	6,93	1312	11,1	5,87	5,75	1010	6,7	5,02	4,92	863	4,8
	1	MIN	1795	7,94	6,51	1366	12,0	7,00	6,22	1204	9,5	5,36	5,25	922	5,6	4,44	4,35	764	3,9
DFCL 44	5	MAX	3340	12,99	11,25	2234	17,1	11,53	10,86	1983	13,6	8,94	8,76	1537	8,3	7,72	7,57	1329	6,2
	4		3085	12,41	10,61	2134	15,7	10,98	10,21	1889	12,5	8,49	8,32	1460	7,6	7,32	7,17	1259	5,6
	3	MED	2820	11,56	9,71	1988	13,8	10,22	9,32	1759	10,9	7,87	7,71	1353	6,5	6,74	6,61	1160	4,8
	2		2560	10,89	9,02	1874	12,4	9,63	8,64	1656	9,7	7,38	7,23	1269	5,8	6,23	6,11	1072	4,1
	1	MIN	2245	9,98	8,09	1716	10,5	8,79	7,71	1512	8,2	6,71	6,57	1153	4,9	5,44	5,33	936	3,2
DFCL 54	5	MAX	4330	16,88	14,79	2903	15,8	14,97	14,24	2576	12,5	11,58	11,35	1991	7,6	10,17	9,97	1750	5,8
	4		3920	15,91	13,72	2737	14,2	14,11	13,17	2426	11,2	10,86	10,65	1869	6,7	9,50	9,31	1634	5,1
	3	MED	3505	14,89	12,60	2561	12,5	13,17	12,06	2265	9,9	10,09	9,89	1736	5,9	8,79	8,61	1512	4,4
	2		3240	14,21	11,87	2443	11,4	12,53	11,34	2156	9,0	9,58	9,39	1648	5,3	8,32	8,15	1430	3,9
	1	MIN	2885	13,20	10,85	2271	10,0	11,65	10,34	2003	7,8	8,87	8,69	1525	4,6	7,58	7,43	1304	3,3

WT: Water temperature
Vn: Nominal speeds
Qv: Air flow
Pc: Cooling total emission
Ps: Cooling sensible emission
Qw: Water flow rate
Dp(c): Dp Cooling

Note: the power absorption (Watt) at p. 22 must be subtracted from the total and sensible cooling emission.

HEATING EMISSION

3 row coil units

Entering air temperature: 20 °C - Available pressure: 0 Pa

Model	Vn		Qv	WT: 70 / 60 °C			WT: 60 / 50 °C			WT: 55 / 45 °C			WT: 50 / 40 °C			WT: 50 / 45 °C			WT: 45 / 40 °C		
				Ph	Qw	Dp(h)	Ph	Qw	Dp(h)	Ph	Qw	Dp(h)	Ph	Qw	Dp(h)	Ph	Qw	Dp(h)	Ph	Qw	Dp(h)
			m^3/h	kW	l/h	kPa	kW	l/h	kPa	kW	l/h	kPa	kW	l/h	kPa	kW	l/h	kPa	kW	l/h	kPa
DFCL 13	5	MAX	1925	16,22	1395	17,7	12,33	1060	11,0	10,39	894	8,2	8,44	726	5,7	9,89	1701	27,2	7,98	1372	18,6
	4		1640	14,61	1257	14,6	11,13	957	9,1	9,38	807	6,8	7,64	657	4,7	8,90	1532	22,4	7,18	1236	15,4
	3	MED	1340	12,74	1096	11,3	9,73	836	7,1	8,21	706	5,3	6,69	575	3,7	7,76	1335	17,4	6,27	1079	11,9
	2		1140	11,39	980	9,2	8,71	749	5,8	7,36	633	4,3	6,00	516	3,0	6,94	1193	14,1	5,61	965	9,7
	1	MIN	995	10,34	889	7,7	7,91	681	4,8	6,70	576	3,6	5,48	471	2,5	6,30	1083	11,8	5,09	876	8,1
DFCL 23	5	MAX	2510	21,50	1849	33,1	16,44	1414	20,9	13,91	1196	15,6	11,37	978	10,9	13,10	2253	50,6	10,60	1824	34,9
	4		2060	18,86	1622	26,0	14,45	1243	16,4	12,24	1053	12,3	10,02	862	8,6	11,50	1978	39,8	9,31	1602	27,5
	3	MED	1550	15,51	1334	18,1	11,92	1025	11,4	10,11	870	8,6	8,30	714	6,0	9,45	1625	27,7	7,67	1319	19,2
	2		1165	12,65	1088	12,4	9,74	838	7,8	8,28	712	5,9	6,81	585	4,1	7,70	1324	18,9	6,25	1075	13,1
	1	MIN	855	10,04	863	8,0	7,75	666	5,1	6,60	568	3,9	5,45	468	2,7	6,10	1050	12,3	4,97	854	8,6
DFCL 33	5	MAX	2790	24,90	2142	33,3	19,10	1642	21,1	16,18	1392	15,8	13,27	1141	11,1	15,19	2612	51,2	12,31	2118	35,4
	4		2590	23,71	2039	30,4	18,19	1564	19,3	15,41	1325	14,4	12,63	1087	10,1	14,46	2487	46,7	11,71	2014	32,3
	3	MED	2300	21,89	1882	26,2	16,80	1445	16,6	14,24	1225	12,4	11,68	1005	8,7	13,34	2294	40,1	10,81	1860	27,8
	2		2080	20,41	1755	23,1	15,69	1349	14,6	13,31	1144	11,0	10,93	940	7,7	12,43	2138	35,4	10,08	1735	24,5
	1	MIN	1815	18,55	1596	19,3	14,27	1227	12,3	12,12	1042	9,2	9,97	857	6,5	11,29	1942	29,6	9,17	1578	20,5
DFCL 43	5	MAX	3400	31,44	2704	25,0	24,09	2072	15,8	20,41	1755	11,8	16,69	1436	8,3	19,16	3295	38,4	15,51	2668	26,5
	4		3130	29,75	2558	22,6	22,80	1960	14,3	19,29	1659	10,7	15,82	1360	7,5	18,11	3115	34,6	14,68	2525	23,9
	3	MED	2855	27,34	2351	19,3	20,99	1805	12,2	17,78	1529	9,1	14,58	1254	6,4	16,65	2864	29,6	13,51	2324	20,5
	2		2585	25,56	2198	17,0	19,61	1687	10,8	16,64	1431	8,1	13,66	1174	5,7	15,56	2677	26,1	12,61	2170	18,1
	1	MIN	2265	23,03	1981	14,1	17,70	1522	8,9	15,03	1293	6,7	12,35	1062	4,7	14,01	2410	21,5	11,37	1956	14,9
DFCL 53	5	MAX	4400	41,01	3527	29,2	31,42	2702	18,4	26,61	2288	13,8	21,79	1874	9,7	24,97	4295	44,7	20,23	3480	31,0
	4		3975	38,28	3292	25,7	29,35	2524	16,3	24,88	2140	12,2	20,39	1753	8,5	23,30	4008	39,4	18,88	3248	27,2
	3	MED	3540	35,31	3037	22,2	27,14	2334	14,1	23,01	1979	10,5	18,87	1623	7,4	21,50	3698	34,0	17,45	3002	23,5
	2		3275	33,45	2877	20,1	25,71	2211	12,7	21,82	1876	9,5	17,89	1539	6,7	20,38	3505	30,7	16,52	2842	21,3
	1	MIN	2905	30,72	2642	17,1	23,64	2033	10,9	20,07	1726	8,1	16,49	1418	5,7	18,70	3217	26,2	15,18	2611	18,2

WT: Water temperature
Vn: Nominal speeds
Qv: Air flow
Ph: Heating emission
Qw: Water flow rate
Dp(h): Dp Heating

4 row coil units

Entering air temperature: 20 °C - Available pressure: 0 Pa

Model	Vn		Qv	WT: 60 / 50 °C			WT: 55 / 45 °C			WT: 50 / 40 °C			WT: 50 / 45 °C			WT: 45 / 40 °C		
				Ph	Qw	Dp(h)	Ph	Qw	Dp(h)	Ph	Qw	Dp(h)	Ph	Qw	Dp(h)	Ph	Qw	Dp(h)
			m^3/h	kW	l/h	kPa	kW	l/h	kPa	kW	l/h	kPa	kW	l/h	kPa	kW	l/h	kPa
DFCL 14	5	MAX	1835	14,20	1221	9,5	11,99	1031	7,1	9,77	840	4,9	11,32	1947	23,3	9,15	1574	16,0
	4		1575	12,77	1098	7,8	10,80	929	5,8	8,82	759	4,0	10,16	1747	19,1	8,22	1413	13,1
	3	MED	1315	11,22	965	6,1	9,51	818	4,6	7,78	669	3,2	8,91	1532	15,0	7,22	1241	10,3
	2		1115	9,95	856	4,9	8,44	726	3,7	6,92	595	2,6	7,88	1356	11,9	6,39	1099	8,2
	1	MIN	940	8,76	753	3,9	7,44	640	2,9	6,11	525	2,0	6,91	1189	9,4	5,61	966	6,5
DFCL 24	5	MAX	2360	18,71	1609	15,2	15,88	1366	11,4	13,02	1120	8,0	14,83	2552	36,9	12,03	2070	25,6
	4		2005	16,69	1435	12,3	14,17	1219	9,2	11,65	1002	6,5	13,20	2271	29,8	10,72	1845	20,6
	3	MED	1535	13,76	1183	8,6	11,71	1007	6,4	9,64	829	4,5	10,84	1865	20,7	8,82	1517	14,3
	2		1160	11,13	957	5,8	9,49	816	4,3	7,84	674	3,1	8,75	1505	13,9	7,13	1226	9,6
	1	MIN	855	8,77	754	3,7	7,48	644	2,8	6,20	533	2,0	6,85	1178	8,8	5,60	963	6,1
DFCL 34	5	MAX	2745	22,36	1923	17,7	19,00	1634	13,2	15,62	1343	9,4	17,67	3040	42,7	14,37	2471	29,5
	4		2550	21,22	1825	16,1	18,04	1552	12,0	14,85	1277	8,5	16,77	2884	38,7	13,63	2344	26,8
	3	MED	2265	19,50	1677	13,7	16,60	1427	10,3	13,67	1176	7,2	15,39	2646	32,9	12,51	2151	22,8
	2		2060	18,20	1565	12,0	15,50	1333	9,0	12,78	1099	6,4	14,34	2466	28,9	11,67	2007	20,1
	1	MIN	1795	16,43	1413	9,9	14,00	1204	7,5	11,56	994	5,3	12,93	2223	23,8	10,53	1811	16,6
DFCL 44	5	MAX	3340	28,23	2428	15,4	24,00	2064	11,6	19,75	1699	8,2	22,29	3834	37,3	18,13	3119	25,8
	4		3085	26,67	2293	13,9	22,68	1951	10,4	18,67	1606	7,3	21,05	3620	33,5	17,12	2944	23,2
	3	MED	2820	24,49	2106	11,8	20,84	1792	8,9	17,16	1476	6,3	19,29	3318	28,5	15,70	2700	19,7
	2		2560	22,77	1958	10,4	19,40	1669	7,8	16,01	1377	5,5	17,92	3083	24,9	14,60	2512	17,3
	1	MIN	2245	20,45	1759	8,4	17,43	1499	6,4	14,39	1238	4,5	16,06	2762	20,3	13,09	2251	14,1
DFCL 54	5	MAX	4330	36,49	3138	14,0	30,98	2665	10,5	25,45	2189	7,4	28,84	4960	33,9	23,43	4029	23,5
	4		3920	33,96	2921	12,3	28,86	2482	9,2	23,73	2041	6,5	26,82	4613	29,7	21,80	3750	20,5
	3	MED	3505	31,31	2692	10,6	26,63	2290	7,9	21,91	1884	5,6	24,69	4246	25,4	20,07	3452	17,6
	2		3240	29,56	2542	9,5	25,16	2163	7,1	20,72	1782	5,0	23,27	4002	22,8	18,94	3257	15,8
	1	MIN	2885	27,08	2329	8,0	23,06	1983	6,0	19,03	1637	4,2	21,30	3664	19,3	17,35	2984	13,4

WT: Water temperature
Vn: Nominal speeds
Qv: Air flow
Ph: Heating emission
Qw: Water flow rate
Dp(h): Dp Heating

1 row additional coil units

For 3 or 4 row versions (3+1 or 4+1 rows)

Entering air temperature: 20 °C - Available pressure: 0 Pa

				WT: 80 / 70 °C			WT: 75 / 65 °C			WT: 70 / 60 °C			WT: 65 / 55 °C			WT: 60 / 50 °C			WT: 55 / 45 °C		
			Qv	Ph	Qw	Dp(h)	Ph	Qw	Dp(h)	Ph	Qw	Dp(h)	Ph	Qw	Dp(h)	Ph	Qw	Dp(h)	Ph	Qw	Dp(h)
Model	Vn		m³/h	kW	l/h	kPa	kW	l/h	kPa	kW	l/h	kPa	kW	l/h	kPa	kW	l/h	kPa	kW	l/h	kPa
DFCL 1	5	MAX	1775	8,05	692	42,7	7,26	624	36,0	6,47	556	29,6	5,67	488	23,8	4,89	420	18,4	4,10	352	13,6
	4		1530	7,44	640	37,1	6,71	577	31,2	5,99	515	25,7	5,25	452	20,7	4,52	389	16,0	3,80	326	11,8
	3	MED	1290	6,78	583	31,3	6,12	527	26,4	5,46	470	21,8	4,80	412	17,5	4,13	355	13,6	3,47	298	10,0
	2		1090	6,18	532	26,4	5,59	480	22,3	4,98	428	18,4	4,38	377	14,8	3,77	324	11,5	3,17	272	8,5
	1	MIN	910	5,57	479	21,9	5,03	433	18,5	4,49	387	15,3	3,95	340	12,2	3,40	293	9,5	2,86	246	7,1
DFCL 2	5	MAX	2285	10,33	888	62,2	9,32	802	52,6	8,30	714	43,5	7,31	628	35,0	6,30	542	27,2	5,30	456	20,1
	4		1965	9,56	822	54,2	8,64	743	45,7	7,71	663	37,7	6,78	583	30,5	5,84	502	23,7	4,91	423	17,6
	3	MED	1520	8,35	718	42,4	7,53	648	35,8	6,73	579	29,6	5,91	509	23,8	5,11	439	18,6	4,30	370	13,8
	2		1155	7,14	614	31,9	6,45	555	27,0	5,76	495	22,3	5,07	436	18,0	4,39	377	14,0	3,69	318	10,4
	1	MIN	850	5,90	507	22,5	5,33	458	19,1	4,76	410	15,7	4,20	361	12,7	3,63	312	9,9	3,06	263	7,4
DFCL 3	5	MAX	2700	12,44	1070	39,0	11,21	964	32,9	9,99	859	27,1	8,77	754	21,7	7,55	649	16,8	6,33	544	12,4
	4		2510	11,98	1031	36,4	10,80	929	30,7	9,64	829	25,3	8,45	727	20,3	7,28	626	15,7	6,10	524	11,6
	3	MED	2235	11,28	970	32,7	10,17	874	27,6	9,07	780	22,7	7,96	685	18,2	6,86	590	14,1	5,75	494	10,4
	2		2040	10,74	924	29,9	9,68	833	25,2	8,64	743	20,8	7,59	653	16,7	6,53	562	13,0	5,48	472	9,6
	1	MIN	1780	9,97	857	26,2	9,00	774	22,0	8,03	691	18,2	7,06	607	14,6	6,07	522	11,3	5,10	439	8,4
DFCL 4	5	MAX	3295	16,17	1391	68,3	14,61	1256	57,9	13,03	1121	47,8	11,48	988	38,6	9,92	853	30,1	8,36	719	22,4
	4		3055	15,52	1335	63,5	14,02	1206	53,7	12,52	1077	44,5	11,04	949	35,8	9,53	819	27,9	8,03	691	20,8
	3	MED	2790	14,59	1255	57,0	13,20	1135	48,2	11,80	1015	39,9	10,37	892	32,1	8,97	771	25,1	7,56	650	18,7
	2		2535	13,86	1192	51,8	12,52	1077	43,8	11,20	963	36,3	9,86	848	29,2	8,52	732	22,8	7,18	617	17,0
	1	MIN	2225	12,82	1102	44,9	11,57	995	37,9	10,34	890	31,5	9,12	784	25,3	7,88	677	19,8	6,65	572	14,8
DFCL 5	5	MAX	4265	20,57	1769	63,1	18,57	1597	53,2	16,58	1426	44,1	14,61	1257	35,6	12,62	1086	27,7	10,63	914	20,6
	4		3875	19,53	1680	57,5	17,66	1519	48,6	15,77	1356	40,2	13,88	1193	32,4	12,00	1032	25,3	10,10	869	18,8
	3	MED	3475	18,40	1583	51,6	16,65	1432	43,6	14,85	1277	36,1	13,09	1125	29,2	11,31	973	22,7	9,54	820	16,9
	2		3210	17,63	1516	47,6	15,93	1370	40,2	14,25	1225	33,3	12,54	1078	26,9	10,85	933	20,9	9,14	786	15,6
	1	MIN	2865	16,56	1424	42,4	14,97	1287	35,9	13,37	1150	29,7	11,78	1013	24,0	10,19	876	18,7	8,59	739	13,9

WT: Water temperature
Vn: Nominal speeds
Qv: Air flow
Ph: Heating emission
Qw: Water flow rate
Dp(h): Dp Heating

2 row additional coil units

For 4 row versions only (4+2 rows)

Entering air temperature: 20 °C - Available pressure: 0 Pa

Model	Vn		Qv	WT: 65 / 55 °C			WT: 60 / 50 °C			WT: 55 / 45 °C			WT: 50 / 40 °C			WT: 45 / 40 °C			WT: 45 / 35 °C		
				Ph	Qw	Dp(h)	Ph	Qw	Dp(h)	Ph	Qw	Dp(h)	Ph	Qw	Dp(h)	Ph	Qw	Dp(h)	Ph	Qw	Dp(h)
			m³/h	kW	l/h	kPa	kW	l/h	kPa	kW	l/h	kPa	kW	l/h	kPa	kW	l/h	kPa	kW	l/h	kPa
DFCL 1	5	MAX	1695	11,59	997	20,4	10,00	860	15,9	8,41	723	11,7	6,82	586	8,1	6,47	1112	26,7	5,22	449	5,0
	4		1470	10,60	912	17,3	9,17	788	13,4	7,72	664	9,9	6,26	538	6,9	5,92	1018	22,6	4,80	413	4,3
	3	MED	1260	9,62	827	14,4	8,31	715	11,2	7,00	602	8,3	5,69	490	5,8	5,37	924	18,9	4,37	376	3,6
	2		1055	8,57	737	11,6	7,41	637	9,1	6,25	538	6,7	5,09	438	4,7	4,78	822	15,2	3,92	337	2,9
	1	MIN	875	7,55	649	9,2	6,53	562	7,2	5,52	474	5,3	4,50	387	3,7	4,21	724	12,1	3,47	299	2,3
DFCL 2	5	MAX	2190	15,33	1318	32,8	13,27	1141	25,5	11,21	964	19,0	9,14	786	13,3	8,57	1474	43,0	7,07	608	8,4
	4		1910	14,07	1210	28,0	12,18	1048	21,8	10,31	887	16,3	8,41	724	11,4	7,87	1353	36,6	6,52	561	7,2
	3	MED	1505	12,07	1038	21,0	10,47	900	16,5	8,87	763	12,3	7,25	623	8,6	6,74	1160	27,5	5,63	484	5,4
	2		1145	10,03	862	15,0	8,71	749	11,7	7,38	635	8,7	6,05	521	6,1	5,60	964	19,6	4,72	406	3,9
	1	MIN	845	8,09	695	10,0	7,03	605	7,8	5,97	513	5,9	4,91	422	4,1	4,51	776	13,1	3,84	330	2,6
DFCL 3	5	MAX	2645	18,47	1589	20,0	15,97	1373	15,5	13,46	1157	11,6	10,94	941	8,0	10,33	1777	26,2	8,40	722	5,0
	4		2455	17,64	1517	18,4	15,24	1311	14,3	12,86	1106	10,6	10,44	898	7,4	9,85	1694	24,0	8,04	691	4,6
	3	MED	2195	16,43	1413	16,1	14,22	1223	12,5	11,99	1031	9,3	9,76	839	6,5	9,18	1580	21,1	7,51	646	4,0
	2		2010	15,54	1336	14,5	13,44	1156	11,3	11,33	975	8,4	9,24	795	5,8	8,67	1492	19,0	7,12	613	3,7
	1	MIN	1765	14,27	1227	12,4	12,35	1062	9,7	10,44	898	7,2	8,51	731	5,0	7,96	1370	16,2	6,57	565	3,1
DFCL 4	5	MAX	3230	23,95	2060	35,6	20,75	1785	27,8	17,57	1511	20,8	14,37	1236	14,5	13,40	2305	46,6	11,17	960	9,2
	4		3005	22,83	1963	32,5	19,79	1702	25,4	16,76	1441	19,0	13,72	1180	13,3	12,77	2196	42,6	10,66	917	8,5
	3	MED	2745	21,25	1827	28,4	18,46	1587	22,3	15,62	1343	16,7	12,80	1101	11,7	11,88	2044	37,4	9,95	856	7,4
	2		2500	19,95	1716	25,3	17,33	1490	19,8	14,69	1264	14,8	12,04	1035	10,4	11,17	1920	33,3	9,38	807	6,6
	1	MIN	2205	18,19	1565	21,3	15,80	1359	16,7	13,41	1153	12,5	11,01	947	8,8	10,17	1749	28,0	8,57	737	5,6
DFCL 5	5	MAX	4170	29,93	2574	30,4	25,94	2231	23,7	21,94	1886	17,7	17,90	1539	12,4	16,73	2877	39,9	13,85	1192	7,8
	4		3810	28,30	2434	27,4	24,51	2107	21,3	20,74	1784	15,9	16,93	1456	11,2	15,82	2720	35,8	13,13	1129	7,1
	3	MED	3430	26,44	2274	24,2	22,94	1973	18,9	19,42	1670	14,1	15,87	1365	9,8	14,79	2543	31,6	12,31	1059	6,2
	2		3165	25,10	2158	21,9	21,77	1872	17,2	18,43	1585	12,8	15,08	1297	9,0	14,03	2414	28,7	11,71	1007	5,7
	1	MIN	2825	23,30	2004	19,1	20,21	1738	14,9	17,13	1473	11,2	14,02	1205	7,8	13,02	2240	25,0	10,90	938	5,0

WT: Water temperature
Vn: Nominal speeds
Qv: Air flow
Ph: Heating emission
Qw: Water flow rate
Dp(h): Dp Heating

CORRECTION FACTOR TABLES

Air flow depending on speed and requested available pressure with 4 row coil

Air flow m^3/h

Model	Speed		Available pressure (Pa)										
			0	20	40	60	80	100	120	140	160	180	200
DFCL 1	5	MAX	1835	1745	1640	1530	1400	1225	995	-	-	-	-
	4		1575	1480	1390	1290	1175	1020	815	-	-	-	-
	3	MED	1315	1250	1175	1075	940	795	-	-	-	-	-
	2		1115	1025	940	840	740	625	-	-	-	-	-
	1	MIN	940	825	730	645	560	-	-	-	-	-	-
DFCL 2	5	MAX	2360	2240	2120	2000	1860	1700	1480	1150	-	-	-
	4		2005	1920	1835	1735	1620	1480	1275	-	-	-	-
	3	MED	1535	1495	1445	1380	1300	1190	1010	-	-	-	-
	2		1160	1150	1135	1105	1065	1015	925	-	-	-	-
	1	MIN	855	835	815	790	755	700	-	-	-	-	-
DFCL 3	5	MAX	2745	2670	2590	2500	2390	2270	2135	1980	1800	1620	-
	4		2550	2470	2380	2280	2175	2045	1900	1750	1595	1425	-
	3	MED	2265	2200	2120	2040	1945	1840	1720	1590	1440	1280	-
	2		2060	2005	1945	1875	1790	1695	1575	1445	1300	-	-
	1	MIN	1795	1745	1690	1625	1545	1460	1355	1235	1105	-	-
DFCL 4	5	MAX	3340	3250	3150	3040	2900	2760	2610	2440	2225	2000	1780
	4		3085	3005	2920	2820	2700	2575	2405	2225	2025	1800	-
	3	MED	2820	2740	2650	2550	2440	2300	2150	1970	1765	1575	-
	2		2560	2480	2400	2305	2200	2050	1905	1745	1575	-	-
	1	MIN	2245	2175	2100	2020	1925	1800	1670	1525	1400	-	-
DFCL 5	5	MAX	4330	4330	4205	4075	3935	3785	3630	3450	3250	3005	2705
	4		3920	3820	3715	3595	3465	3315	3145	2940	2680	2350	-
	3	MED	3505	3425	3340	3245	3130	3000	2845	2650	2400	2080	-
	2		3240	3140	3040	2930	2810	2675	2530	2350	2130	1850	-
	1	MIN	2885	2805	2715	2610	2495	2350	2175	1965	1710	-	-

Power absorption depending on air flow and available pressure

Power absorbed (Watt)

Model	Speed		Available pressure (Pa)										
			0	20	40	60	80	100	120	140	160	180	200
DFCL 1	5	MAX	231	223	213	202	190	174	154	-	-	-	-
	4		204	194	184	174	162	148	130	-	-	-	-
	3	MED	173	167	159	150	137	124	-	-	-	-	-
	2		151	142	134	125	116	106	-	-	-	-	-
	1	MIN	130	118	109	102	95	-	-	-	-	-	-
DFCL 2	5	MAX	380	356	333	312	288	263	232	193	-	-	-
	4		323	304	284	263	240	217	191	-	-	-	-
	3	MED	268	254	239	222	204	184	158	-	-	-	-
	2		221	215	206	191	177	165	151	-	-	-	-
	1	MIN	179	167	158	148	137	126	-	-	-	-	-
DFCL 3	5	MAX	519	510	498	481	460	438	415	393	372	352	-
	4		505	492	473	450	427	400	376	357	340	323	-
	3	MED	464	450	431	411	389	368	349	332	317	301	-
	2		426	413	398	381	362	344	326	310	295	-	-
	1	MIN	380	362	345	330	316	305	294	283	270	-	-
DFCL 4	5	MAX	680	657	627	597	562	532	504	476	447	419	393
	4		600	587	566	541	512	485	453	427	402	378	-
	3	MED	550	527	503	481	459	436	413	389	362	338	-
	2		505	482	460	437	415	389	369	349	329	-	-
	1	MIN	445	425	405	387	368	348	331	314	299	-	-
DFCL 5	5	MAX	867	867	836	806	777	747	719	688	657	622	583
	4		766	739	713	686	659	630	601	569	533	492	-
	3	MED	689	660	634	607	580	554	528	501	471	435	-
	2		612	587	563	540	517	493	470	444	416	384	-
	1	MIN	536	516	496	475	454	431	406	380	353	-	-

Correction factors for Total cooling emission

Values in %

Model	Speed		Available pressure (Pa)										
			0	20	40	60	80	100	120	140	160	180	200
DFCL 1	5	MAX	1,00	0,97	0,94	0,91	0,86	0,79	0,70	-	-	-	-
	4		1,00	0,97	0,94	0,90	0,85	0,78	0,67	-	-	-	-
	3	MED	1,00	0,97	0,94	0,90	0,83	0,75	-	-	-	-	-
	2		1,00	0,96	0,91	0,86	0,79	0,71	-	-	-	-	-
	1	MIN	1,00	0,93	0,87	0,81	0,74	-	-	-	-	-	-
DFCL 2	5	MAX	1,00	0,97	0,94	0,92	0,88	0,83	0,76	0,12	-	-	-
	4		1,00	0,98	0,95	0,93	0,89	0,85	0,77	-	-	-	-
	3	MED	1,00	0,98	0,97	0,95	0,92	0,87	0,79	-	-	-	-
	2		1,00	0,99	0,99	0,97	0,96	0,93	0,88	-	-	-	-
	1	MIN	1,00	0,99	0,97	0,96	0,94	0,90	-	-	-	-	-
DFCL 3	5	MAX	1,00	0,98	0,97	0,95	0,93	0,90	0,87	0,83	0,79	0,74	-
	4		1,00	0,98	0,96	0,94	0,92	0,89	0,85	0,81	0,76	0,71	-
	3	MED	1,00	0,98	0,97	0,95	0,92	0,89	0,86	0,82	0,77	0,71	-
	2		1,00	0,98	0,97	0,95	0,93	0,90	0,86	0,82	0,77	-	-
	1	MIN	1,00	0,98	0,97	0,95	0,92	0,89	0,86	0,81	0,76	-	-
DFCL 4	5	MAX	1,00	0,98	0,97	0,95	0,93	0,90	0,87	0,84	0,79	0,74	0,69
	4		1,00	0,98	0,97	0,95	0,93	0,91	0,87	0,83	0,79	0,73	-
	3	MED	1,00	0,98	0,97	0,95	0,93	0,90	0,86	0,82	0,76	0,71	-
	2		1,00	0,98	0,97	0,95	0,92	0,89	0,85	0,81	0,76	-	-
	1	MIN	1,00	0,98	0,97	0,95	0,92	0,89	0,85	0,80	0,76	-	-
DFCL 5	5	MAX	1,00	1,00	0,98	0,97	0,95	0,93	0,91	0,88	0,85	0,81	0,76
	4		1,00	0,99	0,97	0,96	0,94	0,91	0,89	0,85	0,81	0,74	-
	3	MED	1,00	0,99	0,97	0,96	0,94	0,92	0,89	0,86	0,81	0,74	-
	2		1,00	0,98	0,97	0,95	0,93	0,90	0,87	0,84	0,79	0,72	-
	1	MIN	1,00	0,98	0,97	0,95	0,93	0,90	0,86	0,80	0,74	-	-

Correction factors for Sensible cooling emission and Heating emission

Values in %

Model	Speed		Available pressure (Pa)										
			0	20	40	60	80	100	120	140	160	180	200
DFCL 1	5	MAX	1,00	0,96	0,92	0,88	0,82	0,75	0,64	-	-	-	-
	4		1,00	0,96	0,92	0,87	0,81	0,73	0,61	-	-	-	-
	3	MED	1,00	0,96	0,92	0,87	0,79	0,69	-	-	-	-	-
	2		1,00	0,94	0,89	0,82	0,74	0,65	-	-	-	-	-
	1	MIN	1,00	0,91	0,83	0,76	0,68	-	-	-	-	-	-
DFCL 2	5	MAX	1,00	0,96	0,93	0,89	0,84	0,79	0,71	0,07	-	-	-
	4		1,00	0,97	0,94	0,90	0,86	0,80	0,72	-	-	-	-
	3	MED	1,00	0,98	0,96	0,93	0,89	0,83	0,74	-	-	-	-
	2		1,00	0,99	0,98	0,97	0,94	0,91	0,85	-	-	-	-
	1	MIN	1,00	0,98	0,97	0,95	0,92	0,87	-	-	-	-	-
DFCL 3	5	MAX	1,00	0,98	0,96	0,94	0,91	0,87	0,84	0,79	0,74	0,68	-
	4		1,00	0,98	0,95	0,92	0,89	0,85	0,81	0,76	0,71	0,65	-
	3	MED	1,00	0,98	0,95	0,93	0,90	0,86	0,82	0,77	0,72	0,66	-
	2		1,00	0,98	0,96	0,94	0,91	0,87	0,83	0,77	0,71	-	-
	1	MIN	1,00	0,98	0,96	0,93	0,90	0,86	0,82	0,76	0,70	-	-
DFCL 4	5	MAX	1,00	0,98	0,96	0,94	0,91	0,87	0,84	0,80	0,74	0,69	0,63
	4		1,00	0,98	0,96	0,94	0,91	0,88	0,84	0,79	0,74	0,67	-
	3	MED	1,00	0,98	0,96	0,93	0,90	0,87	0,82	0,77	0,71	0,65	-
	2		1,00	0,98	0,96	0,93	0,90	0,85	0,81	0,76	0,70	-	-
	1	MIN	1,00	0,98	0,95	0,93	0,90	0,85	0,81	0,76	0,71	-	-
DFCL 5	5	MAX	1,00	1,00	0,98	0,96	0,93	0,91	0,88	0,85	0,81	0,77	0,71
	4		1,00	0,98	0,96	0,94	0,92	0,89	0,85	0,81	0,76	0,69	-
	3	MED	1,00	0,98	0,97	0,95	0,92	0,90	0,86	0,82	0,76	0,68	-
	2		1,00	0,98	0,96	0,93	0,90	0,87	0,84	0,79	0,74	0,66	-
	1	MIN	1,00	0,98	0,96	0,93	0,90	0,86	0,82	0,76	0,68	-	-

WATER SIDE PRESSURE DROP AND OPERATING LIMITS

Water side pressure drop

2 pipe unit

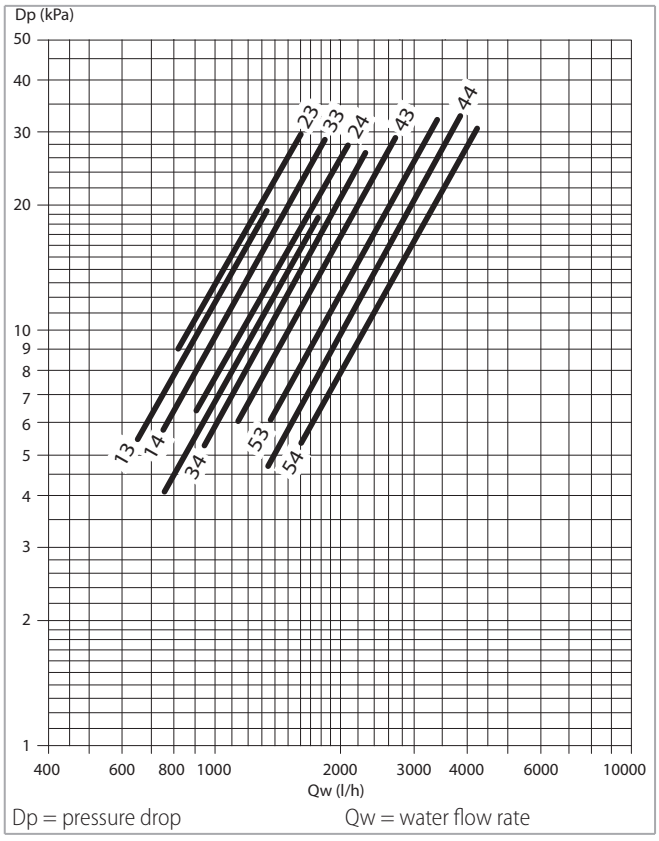

4 pipe unit

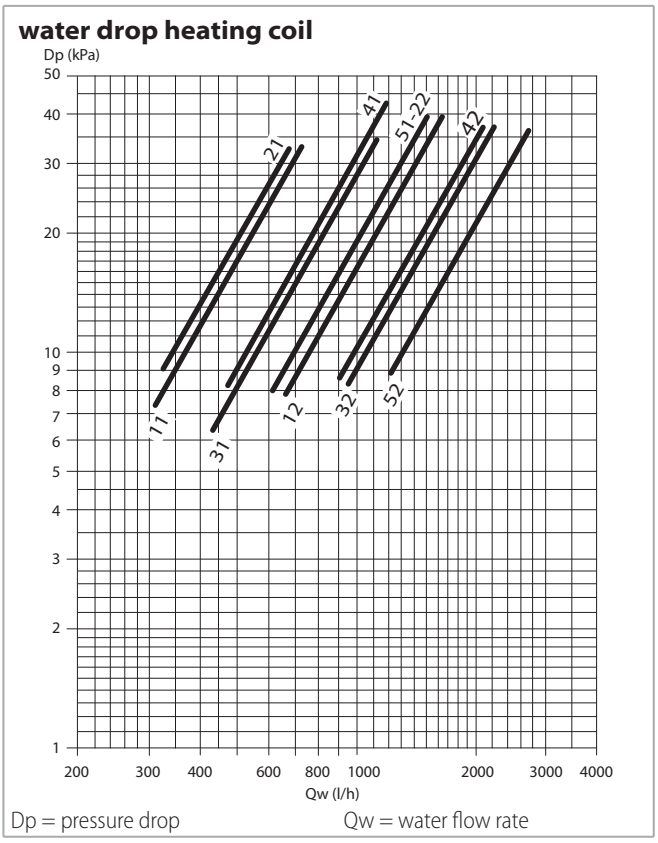

Pressure drop for mean water temperature of **10 °C**, for different temperatures multiply the pressure drop figure by the **K** correction factors in the table.

	Mean water temperature (°C)						
	20	30	40	50	60	70	80
K correction factor	0,94	0,90	0,86	0,82	0,78	0,74	0,70

The water pressure drop figures refer to a mean water temperature of **60 °C**; for different temperatures, multiply the pressure drop figures by the correction factors **K**.

	Mean water temperature (°C)			
	40	50	70	80
K correction factor	1,12	1,06	0,94	0,88

DFCL 1÷5 accessories air side pressure drop

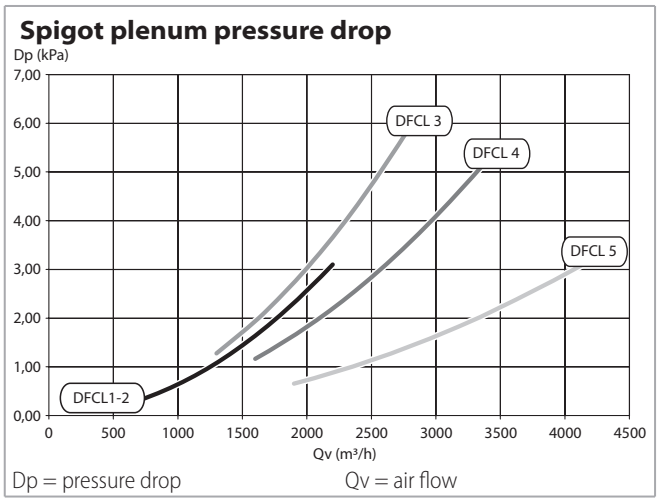

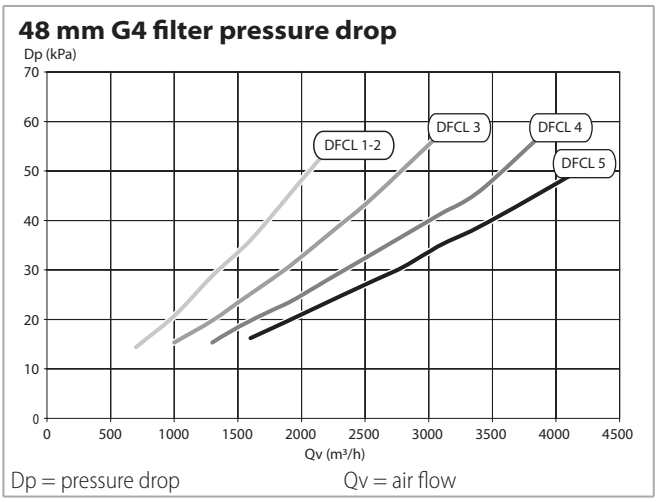

Operation limits

Description		UoM	Value
Water flow	Coil maximum working pressure	bars	16
		kPa	1600
	Lowest water inlet temperature	°C	6
	Highest water inlet temperature	°C	80
Ambient air	Relative humidity	%	15-75
	Minimum temperature	°C	6
	Maximum temperature	°C	40
	MAX. leaving air temperature	**°C**	**50**
Power supply	Single-phase rated operating voltage	V/Hz	230/50

Motor electrical data - max. absorption

Model		DFCL 1	DFCL 2	DFCL 3	DFCL 4	DFCL 5
230/1	W	240	340	523	680	885
50 Hz	A	1,09	1,60	2,45	3,20	4,01

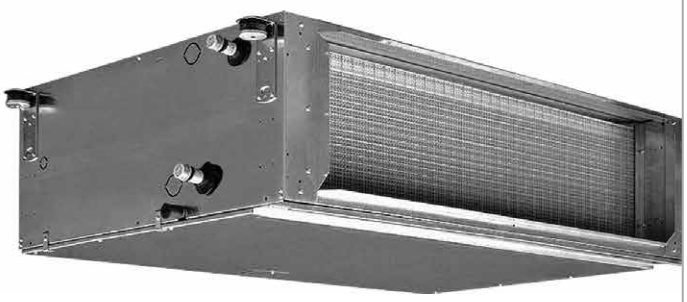

DIMENSION, WEIGHT AND WATER CONTENT

Left configuration (standard)

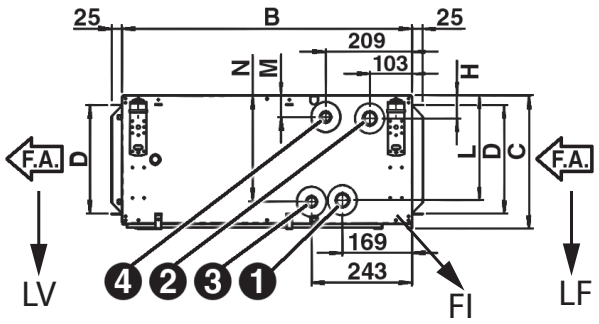

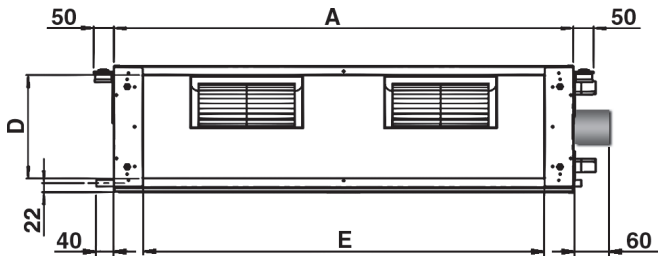

Right configuration (on demand)

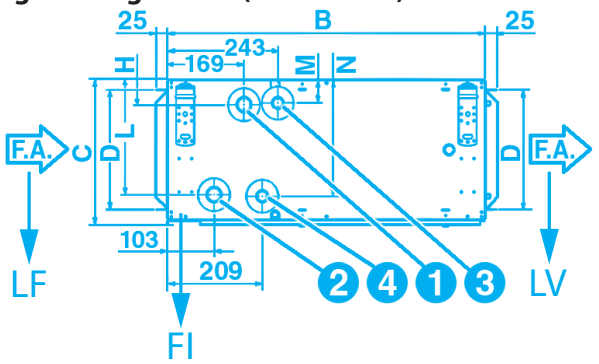

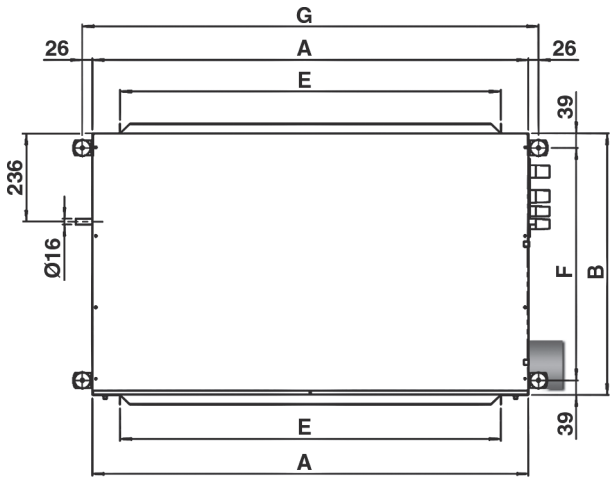

1 = main coil water inlet
2 = main coil water outlet
3 = additional coil water inlet
4 = additional coil water outlet
LV = fan side (outlet)
FI = filter
LF = filter side (inlet)
F.A. = air flow

Standard

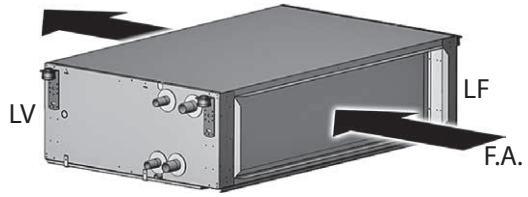

Coil connections on the left looking the air direction

Wiring terminal board

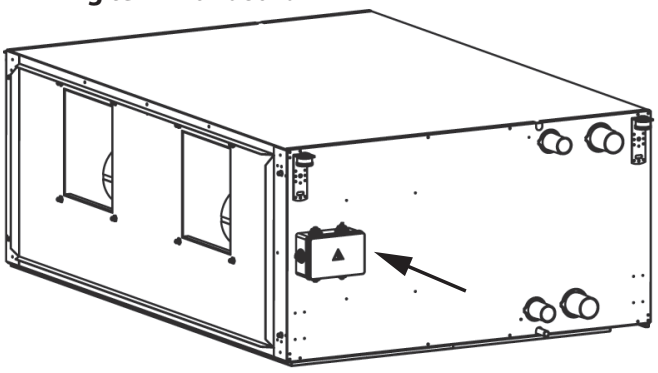

Dimensions

Model		DFCL 1	DFCL 2	DFCL 3	DFCL 4	DFCL 5
A	mm	1133	1133	1133	1445	1445
B	mm	698	698	698	853	853
C	mm	310	310	360	360	435
D	mm	255	255	305	293	368
E	mm	991	991	991	1302	1302
F	mm	620	620	620	775	775
G	mm	1185	1185	1185	1497	1497
H	mm	54	54	54	58	58
L	mm	245	245	295	291	367
M	mm	50	50	50	54	54
N	mm	249	249	299	295	370

Coil connections

Model	Pos.	DFCL 1	DFCL 2	DFCL 3	DFCL 4	DFCL 5
Main coil inlet	1	3/4″	1″	1″	1 1/4″	1 1/4″
Main coil outlet	2	3/4″	1″	1″	1 1/4″	1 1/4″
Additional coil inlet	3	3/4″	3/4″	3/4″	1″	1″
Additional coil outlet	4	3/4″	3/4″	3/4″	1″	1″

Packed unit

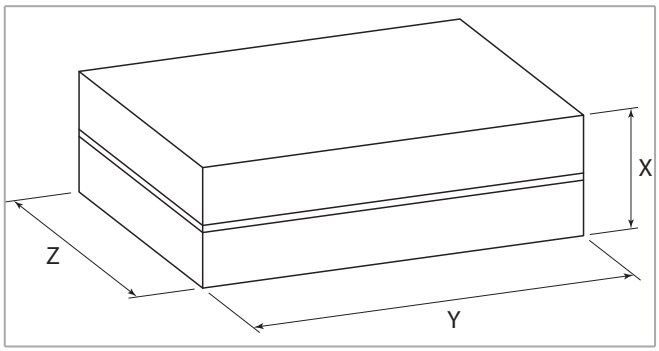

Model		DFCL 1	DFCL 2	DFCL 3	DFCL 4	DFCL 5
X	mm	330		380		455
Y	mm	1290			1605	
Z	mm	805			960	

Weight (kg)

Weight without packaging

Model	DFCL 1	DFCL 2	DFCL 3	DFCL 4	DFCL 5
3 rows	45	46	54	75	85
3+1 rows	48	50	58	80	90
3+2 rows	50	52	60	83	94
4 rows	47	48	56	78	88
4+1 rows	50	51	60	83	94
4+2 rows	51	53	62	86	98

Weight with packaging

Model	DFCL 1	DFCL 2	DFCL 3	DFCL 4	DFCL 5
3 rows	48	49	57	79	89
3+1 rows	51	53	61	84	94
3+2 rows	53	55	63	87	98
4 rows	50	51	59	82	92
4+1 rows	53	54	63	87	98
4+2 rows	54	56	65	90	102

Water content (l)

Water content

Model	DFCL 1	DFCL 2	DFCL 3	DFCL 4	DFCL 5
3 rows	2,0	2,9	3,5	4,7	5,7
4 rows	2,6	3,7	4,6	6,0	7,1
+1 row	0,9	1,1	1,4	2,0	2,7
+2 rows	1,5	1,8	2,4	3,2	4,1

CONSTRUCTION FEATURES

DFCL 6-7 range with AC asynchronous motor

The fan coil units of the **DFCL** range allow at very economical cost to heat and/or cool all civil, industrial, commercial or sports premises.

They are designed and built for installation in the suspended ceilings, concealed or ducted.

The **DFCL 6-7 sizes** supply a consistent air flow with static pressure up to 250 Pa.
The **DFCL 6-7 sizes** can be equipped either with a 4 or 6 row coil or with two coils with 4+2 or 6+2 rows.

The fan assembly has 3 speeds.

Compliant with Regulation (EU) No. 327/2011.

Casing

It is made with 1,2 mm galvanized steel for sizes 6-7, insulated with 10 mm polyolefin (PO) foam (B-s2-d0 EN 13501-1).

Fan assembly

Consists of quiet centrifugal fans with two impellers and a directly driven single phase, three speed motor, 230 V 50 Hz, with external rotor, capacitor, insulation class F.

Coil

It is manufactured from drawn copper tube and the aluminium fins are mechanically bonded onto the tube by an expansion process.

The **DFCL** (sizes 6÷7) is available with the combination of either 4 or 6 row coils with the possibility to add a 2 row coil (4+2, 6+2 versions for 4 pipe systems).
The connections are on the left side looking from the air inlet of the unit (see following picture and technical drawings on p. 40).

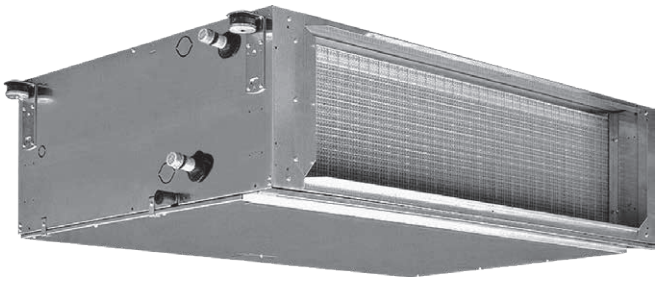

On request the connections can be moved to the other side.

The coil is not suitable for use in corrosive atmosphere or in environments where aluminium may be subject to corrosion.

Filter

The filter is made of polypropylene cellular fabric regenerating filter. The filter frame of galvanized steel is inserted into sliding guides fastened to the internal structure for easy insertion and removal of the filter.

Condensate collection tray

It is made from galvanized steel insulated with 3 mm polyolefin (PO) foam (B-s2-d0 EN 13501-1).

MAIN PERFORMANCES AND TECHNICAL CHARACTERISTICS

4 and 6 row coil - 2 pipe units

The following standard rating conditions are used:

COOLING
Entering air temperature: + 27 °C d.b. + 19 °C w.b.
Water temperature: +7 °C E.W.T. +12 °C L.W.T.

HEATING
Entering air temperature: + 20 °C
Water temperature: +60 °C E.W.T, +50 °C L.W.T.

Available pressure: 0 Pa

MODEL		DFCL 64			DFCL 66			DFCL 74			DFCL 76		
Speed		1	2	3	1	2	3	1	2	3	1	2	3
Air flow	m^3/h	2200	3580	5200	2190	3570	5170	3960	5210	7480	3960	5210	7435
Cooling total emission	kW	13,83	19,28	23,94	16,28	23,47	29,89	21,45	25,55	31,22	26,09	31,62	39,52
Cooling sensible emission	kW	9,99	14,64	18,98	11,25	16,90	22,32	16,04	19,66	25,14	18,44	23,02	29,94
Heating emission	kW	23,77	35,01	46,21	26,09	39,57	53,27	39,61	48,83	63,38	44,57	55,84	73,68
Dp Cooling	kPa	9,0	16,4	24,6	11,6	22,2	34,8	14,6	19,8	29,1	18,6	26,1	39,5
Dp Heating	kPa	4,9	9,9	16,3	5,7	12,1	20,6	8,6	12,5	20,0	9,9	14,8	24,4
Fan	W	732	943	1437	715	933	1414	1666	1879	2803	1666	1879	2764
Sound power (Lw)	dB(A)	61	69	76	61	69	76	68	74	81	68	74	81
Sound pressure (Lp) (1)	dB(A)	52	60	67	52	60	67	59	65	72	59	65	72

(1) The sound pressure levels are 9 dB (A) lower than the sound power levels, apply to the reverberant field of a 100 m^3 room and a reverberation time of 0.5 sec.

Available pressure: 150 Pa

MODEL		DFCL 64			DFCL 66			DFCL 74			DFCL 76		
Speed		1	2	3	1	2	3	1	2	3	1	2	3
Air flow	m^3/h	1880	3385	4800	1860	3350	4740	3925	5070	7100	3920	5050	7030
Cooling total emission	kW	12,42	18,73	22,89	14,36	22,59	28,28	21,54	25,33	30,63	26,09	31,17	38,42
Cooling sensible emission	kW	8,88	14,16	17,98	9,84	16,20	20,91	16,05	19,46	24,53	18,49	22,66	28,96
Heating emission	kW	20,86	33,52	43,60	22,58	37,53	49,77	39,34	47,85	61,14	44,20	54,45	70,64
Dp Cooling	kPa	7,4	15,3	22,6	9,2	20,5	31,4	14,4	19,3	27,6	18,3	25,1	37,1
Dp Heating	kPa	3,9	9,1	14,7	4,4	11,0	18,2	8,5	12,1	18,8	9,7	14,2	22,6
Fan	W	570	788	1191	565	771	1163	1610	1738	2502	1605	1720	2452
Sound power (Lw)	dB(A)	63	71	77	63	71	77	71	75	81	71	75	81
Sound pressure (Lp) (1)	dB(A)	54	62	68	54	62	68	62	66	72	62	66	72

(1) The sound pressure levels are 9 dB (A) lower than the sound power levels, apply to the reverberant field of a 100 m^3 room and a reverberation time of 0.5 sec.

4+2 and 6+2 row coil - 4 pipe units

The following standard rating conditions are used:

COOLING
Entering air temperature: + 27 °C d.b. + 19 °C w.b.
Water temperature: +7 °C E.W.T. +12 °C L.W.T.

HEATING
Entering air temperature: + 20 °C
Water temperature: +70 °C E.W.T., +60 °C L.W.T.

Available pressure: 0 Pa

MODEL		DFCL 64+2			DFCL 66+2			DFCL 74+2			DFCL 76+2		
Speed		1	2	3	1	2	3	1	2	3	1	2	3
Air flow	m^3/h	2190	3570	5150	2180	3570	5125	3960	5210	7410	3960	5210	7355
Cooling total emission	kW	13,80	19,24	23,81	16,21	23,47	29,75	21,45	25,55	31,16	26,09	31,62	39,28
Cooling sensible emission	kW	9,97	14,61	18,87	11,20	16,90	22,20	15,95	19,66	25,06	18,44	23,02	29,73
Heating emission	kW	22,28	31,16	39,42	22,21	31,16	39,27	35,74	42,78	53,25	35,74	42,78	52,98
Dp Cooling	kPa	9,0	16,3	24,3	11,5	22,2	34,4	14,6	19,8	28,9	18,6	26,1	38,9
Dp Heating	kPa	14,7	27,0	41,2	14,7	27,0	40,9	24,1	33,3	49,3	24,1	33,3	48,9
Fan	W	715	933	1400	708	933	1382	1666	1879	2743	1666	1879	2698
Sound power (Lw)	dB(A)	61	69	76	61	69	76	68	74	81	68	74	81
Sound pressure (Lp) (1)	dB(A)	52	60	67	52	60	67	59	65	72	59	65	72

(1) The sound pressure levels are 9 dB (A) lower than the sound power levels, apply to the reverberant field of a 100 m^3 room and a reverberation time of 0.5 sec.

Available pressure: 150 Pa

MODEL		DFCL 64+2			DFCL 66+2			DFCL 74+2			DFCL 76+2		
Speed		1	2	3	1	2	3	1	2	3	1	2	3
Air flow	m^3/h	1860	3330	4680	1850	3300	4600	3920	5040	6980	3910	5000	6900
Cooling total emission	kW	12,33	18,56	22,52	14,10	22,04	27,53	21,53	25,25	30,36	26,08	30,98	38,04
Cooling sensible emission	kW	8,81	14,02	17,62	9,59	15,70	20,26	16,05	19,39	24,28	18,48	22,51	28,62
Heating emission	kW	19,81	29,78	37,13	19,73	29,59	36,76	35,50	41,88	51,31	35,41	41,68	50,95
Dp Cooling	kPa	7,3	15,0	22,0	9,1	20,1	30,3	14,4	19,1	27,1	18,3	24,8	36,3
Dp Heating	kPa	11,9	24,9	37,0	11,8	24,6	36,3	23,8	32,0	46,1	23,7	31,7	45,5
Fan	W	565	762	1137	560	749	1105	1605	1710	2417	1587	1677	2364
Sound power (Lw)	dB(A)	63	71	77	63	71	77	71	75	81	71	75	81
Sound pressure (Lp) (1)	dB(A)	54	62	68	54	62	68	62	66	72	62	66	72

(1) The sound pressure levels are 9 dB (A) lower than the sound power levels, apply to the reverberant field of a 100 m^3 room and a reverberation time of 0.5 sec.

COOLING EMISSION

4 row coil units

Entering air temperature: 27 °C - R.H.: 50% - Available pressure: 0 Pa

Model	Vn		Qv	WT: 7 / 12 °C				WT: 8 / 13 °C				WT: 10 / 15 °C				WT: 12 / 17 °C			
				Pc	Ps	Qw	Dp(c)	Pc	Ps	Qw	Dp(c)	Pc	Ps	Qw	Dp(c)	Pc	Ps	Qw	Dp(c)
			m³/h	kW	kW	l/h	kPa	kW	kW	l/h	kPa	kW	kW	l/h	kPa	kW	kW	l/h	kPa
DFCL 64	3	MAX	5200	27,34	20,66	4702	28,1	24,47	19,80	4208	22,9	19,14	18,22	3292	14,6	14,66	14,66	2521	9,0
	2	MED	3580	21,84	15,72	3757	18,8	19,51	14,93	3355	15,3	15,15	13,49	2605	9,6	11,43	11,43	1966	5,7
	1	MIN	2200	15,74	10,80	2707	10,4	14,06	10,16	2418	8,5	10,86	9,00	1868	5,3	8,07	8,04	1387	3,1
DFCL 74	3	MAX	7480	36,63	28,38	6300	33,2	32,78	27,28	5638	27,1	25,78	25,34	4434	17,4	19,87	19,87	3418	10,8
	2	MED	5210	29,70	21,85	5108	22,8	26,55	20,83	4566	18,5	20,71	19,00	3561	11,7	15,70	15,70	2700	7,1
	1	MIN	3960	25,08	17,85	4314	16,8	22,39	16,90	3852	13,6	17,34	15,20	2982	8,5	13,05	13,05	2244	5,1

WT: Water temperature
Vn: Nominal speeds
Qv: Air flow
Pc: Cooling total emission
Ps: Cooling sensible emission
Qw: Water flow rate
Dp(c): Dp Cooling

Entering air temperature: 26 °C - R.H.: 50% - Available pressure: 0 Pa

Model	Vn		Qv	WT: 7 / 12 °C				WT: 8 / 13 °C				WT: 10 / 15 °C				WT: 12 / 17 °C			
				Pc	Ps	Qw	Dp(c)	Pc	Ps	Qw	Dp(c)	Pc	Ps	Qw	Dp(c)	Pc	Ps	Qw	Dp(c)
			m³/h	kW	kW	l/h	kPa	kW	kW	l/h	kPa	kW	kW	l/h	kPa	kW	kW	l/h	kPa
DFCL 64	3	MAX	5200	24,32	19,77	4183	22,8	21,66	18,95	3725	18,4	16,79	16,79	2887	11,5	12,78	12,78	2197	7,0
	2	MED	3580	19,42	14,95	3339	15,2	17,20	14,18	2959	12,2	13,19	12,83	2269	7,5	9,88	9,88	1700	4,4
	1	MIN	2200	13,97	10,19	2403	8,4	12,36	9,57	2126	6,7	9,39	8,49	1616	4,1	6,91	6,91	1189	2,3
DFCL 74	3	MAX	7480	32,65	27,26	5616	27,0	29,10	26,22	5005	21,8	22,71	22,71	3906	13,8	17,39	17,39	2991	8,5
	2	MED	5210	26,41	20,83	4542	18,4	23,47	19,87	4037	14,8	18,09	18,09	3111	9,2	13,63	13,63	2344	5,5
	1	MIN	3960	22,26	16,92	3830	13,5	19,73	16,03	3394	10,9	15,10	14,44	2597	6,6	11,26	11,26	1936	3,9

WT: Water temperature
Vn: Nominal speeds
Qv: Air flow
Pc: Cooling total emission
Ps: Cooling sensible emission
Qw: Water flow rate
Dp(c): Dp Cooling

Entering air temperature: 25 °C - R.H.: 50% - Available pressure: 0 Pa

Model	Vn		Qv	WT: 7 / 12 °C				WT: 8 / 13 °C				WT: 10 / 15 °C				WT: 12 / 17 °C			
				Pc	Ps	Qw	Dp(c)	Pc	Ps	Qw	Dp(c)	Pc	Ps	Qw	Dp(c)	Pc	Ps	Qw	Dp(c)
			m³/h	kW	kW	l/h	kPa	kW	kW	l/h	kPa	kW	kW	l/h	kPa	kW	kW	l/h	kPa
DFCL 64	3	MAX	5200	21,58	18,92	3711	18,4	19,10	18,12	3285	14,7	14,70	14,70	2529	9,1	12,96	12,96	2230	7,2
	2	MED	3580	17,13	14,18	2947	12,1	15,09	13,45	2595	9,6	11,48	11,48	1974	5,8	9,54	9,54	1640	4,1
	1	MIN	2200	12,30	9,59	2116	6,7	10,81	9,01	1859	5,3	8,09	8,00	1392	3,1	5,99	5,99	1031	1,8
DFCL 74	3	MAX	7480	29,02	26,17	4992	21,8	25,74	25,16	4427	17,5	19,95	19,95	3431	11,0	17,70	17,70	3044	8,8
	2	MED	5210	23,37	19,84	4020	14,8	20,63	18,92	3549	11,8	15,76	15,76	2711	7,2	13,75	13,75	2365	5,6
	1	MIN	3960	19,63	16,02	3376	10,8	17,29	15,18	2974	8,6	13,09	13,09	2252	5,1	10,61	10,61	1824	3,5

WT: Water temperature
Vn: Nominal speeds
Qv: Air flow
Pc: Cooling total emission
Ps: Cooling sensible emission
Qw: Water flow rate
Dp(c): Dp Cooling

Note: the power absorption (Watt) at p. 38 must be subtracted from the total and sensible cooling emission.

6 row coil units

Entering air temperature: 27 °C - R.H.: 50% - Available pressure: 0 Pa

Model	Vn		Qv	WT: 7 / 12 °C				WT: 8 / 13 °C				WT: 10 / 15 °C				WT: 12 / 17 °C			
				Pc	Ps	Qw	Dp(c)	Pc	Ps	Qw	Dp(c)	Pc	Ps	Qw	Dp(c)	Pc	Ps	Qw	Dp(c)
			m³/h	kW	kW	l/h	kPa	kW	kW	l/h	kPa	kW	kW	l/h	kPa	kW	kW	l/h	kPa
DFCL 66	3	MAX	5170	33,72	23,82	5799	39,7	30,21	22,56	5196	32,5	23,54	20,26	4049	20,5	17,76	17,76	3055	12,2
	2	MED	3570	26,33	17,92	4529	25,5	23,62	16,87	4063	20,8	18,35	14,93	3157	13,1	13,68	13,29	2354	7,7
	1	MIN	2190	18,29	12,03	3146	13,2	16,47	11,28	2833	10,9	12,82	9,84	2204	6,9	9,47	8,60	1628	3,9
DFCL 76	3	MAX	7435	45,41	32,78	7811	44,9	40,68	31,16	6998	36,7	31,79	28,21	5468	23,3	24,13	24,13	4151	14,1
	2	MED	5210	36,21	25,10	6228	29,9	32,43	23,68	5579	24,4	25,24	21,11	4341	15,4	18,91	18,91	3252	9,1
	1	MIN	3960	29,97	20,26	5156	21,3	26,89	19,05	4625	17,4	20,88	16,79	3591	10,9	15,53	14,90	2672	6,4

WT: Water temperature
Vn: Nominal speeds
Qv: Air flow
Pc: Cooling total emission
Ps: Cooling sensible emission
Qw: Water flow rate
Dp(c): Dp Cooling

Entering air temperature: 26 °C - R.H.: 50% - Available pressure: 0 Pa

Model	Vn		Qv	WT: 7 / 12 °C				WT: 8 / 13 °C				WT: 10 / 15 °C				WT: 12 / 17 °C			
				Pc	Ps	Qw	Dp(c)	Pc	Ps	Qw	Dp(c)	Pc	Ps	Qw	Dp(c)	Pc	Ps	Qw	Dp(c)
			m³/h	kW	kW	l/h	kPa	kW	kW	l/h	kPa	kW	kW	l/h	kPa	kW	kW	l/h	kPa
DFCL 66	3	MAX	5170	30,04	22,60	5167	32,3	26,67	21,37	4587	25,9	20,53	19,22	3530	16,0	15,34	15,34	2639	9,4
	2	MED	3570	23,47	16,92	4037	20,7	20,84	15,90	3585	16,6	15,92	14,06	2739	10,2	11,74	11,74	2019	5,8
	1	MIN	2190	16,35	11,32	2812	10,8	14,55	10,57	2503	8,7	11,07	9,20	1905	5,3	8,06	8,06	1386	3,0
DFCL 76	3	MAX	7435	40,52	31,21	6969	36,6	36,00	29,63	6192	29,4	27,82	26,86	4785	18,3	20,93	20,93	3601	10,9
	2	MED	5210	32,24	23,74	5545	24,2	28,64	22,38	4926	19,5	21,91	19,94	3769	11,9	16,28	16,28	2800	6,9
	1	MIN	3960	26,70	19,10	4592	17,3	23,71	17,92	4077	13,9	18,09	15,80	3112	8,4	13,30	13,30	2287	4,8

WT: Water temperature
Vn: Nominal speeds
Qv: Air flow
Pc: Cooling total emission
Ps: Cooling sensible emission
Qw: Water flow rate
Dp(c): Dp Cooling

Entering air temperature: 25 °C - R.H.: 50% - Available pressure: 0 Pa

Model	Vn		Qv	WT: 7 / 12 °C				WT: 8 / 13 °C				WT: 10 / 15 °C				WT: 12 / 17 °C			
				Pc	Ps	Qw	Dp(c)	Pc	Ps	Qw	Dp(c)	Pc	Ps	Qw	Dp(c)	Pc	Ps	Qw	Dp(c)
			m³/h	kW	kW	l/h	kPa	kW	kW	l/h	kPa	kW	kW	l/h	kPa	kW	kW	l/h	kPa
DFCL 66	3	MAX	5170	26,56	21,38	4568	25,9	23,44	20,24	4032	20,6	17,82	17,82	3065	12,4	13,35	13,35	2296	7,3
	2	MED	3570	20,73	15,93	3566	16,6	18,25	14,95	3139	13,1	13,74	13,25	2363	7,8	10,05	10,05	1729	4,4
	1	MIN	2190	14,47	10,61	2489	8,7	12,74	9,89	2192	6,9	9,51	8,61	1636	4,0	6,85	6,85	1179	2,2
DFCL 76	3	MAX	7435	35,88	29,64	6172	29,4	31,72	28,16	5455	23,4	24,23	24,23	4168	14,3	19,15	19,15	3294	9,3
	2	MED	5210	28,52	22,41	4905	19,4	25,12	21,11	4320	15,4	19,00	18,86	3267	9,2	13,99	13,99	2406	5,3
	1	MIN	3960	23,61	17,97	4061	13,8	20,77	16,84	3573	10,9	15,60	14,87	2684	6,5	11,38	11,38	1957	3,6

WT: Water temperature
Vn: Nominal speeds
Qv: Air flow
Pc: Cooling total emission
Ps: Cooling sensible emission
Qw: Water flow rate
Dp(c): Dp Cooling

Note: the power absorption (Watt) at p. 38 must be subtracted from the total and sensible cooling emission.

HEATING EMISSION

4 row coil units

Entering air temperature: 20 °C - Available pressure: 0 Pa

Model	Vn		Qv	WT: 60 / 50 °C			WT: 55 / 45 °C			WT: 50 / 40 °C			WT: 50 / 45 °C			WT: 45 / 40 °C		
				Ph	Qw	Dp(h)	Ph	Qw	Dp(h)	Ph	Qw	Dp(h)	Ph	Qw	Dp(h)	Ph	Qw	Dp(h)
			m^3/h	kW	l/h	kPa	kW	l/h	kPa	kW	l/h	kPa	kW	l/h	kPa	kW	l/h	kPa
DFCL 64	3	MAX	5200	46,21	3974	16,3	39,30	3380	12,4	32,35	2782	8,9	36,45	6269	38,0	29,65	5100	26,7
	2	MED	3580	35,01	3011	9,9	29,85	2567	7,5	24,67	2122	5,5	27,45	4722	22,8	22,38	3849	16,1
	1	MIN	2200	23,77	2044	4,9	20,35	1750	3,8	16,91	1455	2,8	18,51	3183	11,2	15,14	2605	8,0
DFCL 74	3	MAX	7480	63,38	5450	20,0	53,87	4632	15,2	44,26	3806	10,9	50,07	8613	46,9	40,68	6998	32,9
	2	MED	5210	48,83	4199	12,5	41,59	3577	9,6	34,31	2951	6,9	38,39	6603	29,1	31,29	5381	20,5
	1	MIN	3960	39,61	3406	8,6	33,82	2908	6,6	27,99	2407	4,8	31,03	5337	19,8	25,31	4353	14,0

WT: Water temperature
Vn: Nominal speeds
Qv: Air flow
Ph: Heating emission
Qw: Water flow rate
Dp(h): Dp Heating

6 row coil units

Entering air temperature: 20 °C - Available pressure: 0 Pa

Model	Vn		Qv	WT: 55 / 45 °C			WT: 50 / 40 °C			WT: 50 / 45 °C			WT: 45 / 40 °C		
				Ph	Qw	Dp(h)	Ph	Qw	Dp(h)	Ph	Qw	Dp(h)	Ph	Qw	Dp(h)
			m^3/h	kW	l/h	kPa	kW	l/h	kPa	kW	l/h	kPa	kW	l/h	kPa
DFCL 66	3	MAX	5170	45,60	3922	15,9	37,92	3261	11,6	41,53	7143	47,1	33,97	5843	33,4
	2	MED	3570	33,99	2923	9,3	28,36	2439	6,9	30,66	5274	27,3	25,16	4327	19,5
	1	MIN	2190	22,49	1934	4,4	18,86	1622	3,3	20,07	3452	12,7	16,53	2843	9,1
DFCL 76	3	MAX	7435	63,02	5420	18,7	52,30	4498	13,6	57,60	9908	56,0	47,09	8099	39,7
	2	MED	5210	47,87	4117	11,4	39,85	3427	8,4	43,42	7468	33,7	35,56	6117	24,0
	1	MIN	3960	38,30	3293	7,6	31,99	2751	5,6	34,50	5934	22,3	28,33	4873	15,9

WT: Water temperature
Vn: Nominal speeds
Qv: Air flow
Ph: Heating emission
Qw: Water flow rate
Dp(h): Dp Heating

2 row additional coil units

For 4 or 6 row versions (4+2 or 6+2 rows)

Entering air temperature: 20 °C - Available pressure: 0 Pa

Model	Vn		Qv	WT: 65 / 55 °C			WT: 60 / 50 °C			WT: 55 / 45 °C			WT: 50 / 40 °C			WT: 50 / 45 °C			WT: 45 / 40 °C			WT: 45 / 35 °C		
				Ph	Qw	Dp(h)	Ph	Qw	Dp(h)	Ph	Qw	Dp(h)	Ph	Qw	Dp(h)	Ph	Qw	Dp(h)	Ph	Qw	Dp(h)	Ph	Qw	Dp(h)
			m^3/h	kW	l/h	kPa	kW	l/h	kPa	kW	l/h	kPa	kW	l/h	kPa	kW	l/h	kPa	kW	l/h	kPa	kW	l/h	kPa
DFCL 6	3	MAX	5125	34,75	2989	33,4	30,15	2593	26,3	25,49	2192	19,8	20,84	1792	14,0	24,03	4133	62,5	19,46	3346	43,6	16,16	1390	9,0
	2	MED	3570	27,55	2369	22,0	23,90	2055	17,3	20,26	1742	13,1	16,59	1427	9,3	19,01	3270	41,0	15,41	2650	28,6	12,92	1111	6,0
	1	MIN	2180	19,71	1695	12,0	17,13	1473	9,5	14,56	1252	7,2	11,98	1030	5,2	13,56	2332	22,3	11,01	1894	15,6	9,37	806	3,4
DFCL 7	3	MAX	7355	46,94	4037	40,0	40,66	3496	31,4	34,38	2957	23,6	28,05	2412	16,7	32,46	5583	74,9	26,26	4517	52,1	21,70	1866	10,7
	2	MED	5210	37,78	3249	27,0	32,76	2817	21,3	27,74	2385	16,0	22,70	1952	11,4	26,11	4490	50,6	21,11	3632	35,2	17,63	1516	7,4
	1	MIN	3960	31,58	2716	19,6	27,39	2356	15,4	23,24	1999	11,7	19,06	1639	8,3	21,77	3745	36,5	17,64	3034	25,4	14,85	1277	5,4

WT: Water temperature
Vn: Nominal speeds
Qv: Air flow
Ph: Heating emission
Qw: Water flow rate
Dp(h): Dp Heating

AVAILABLE PRESSURE AND PRESSURE DROPS

Available pressure for DFCL 64 (with 4 row coil)

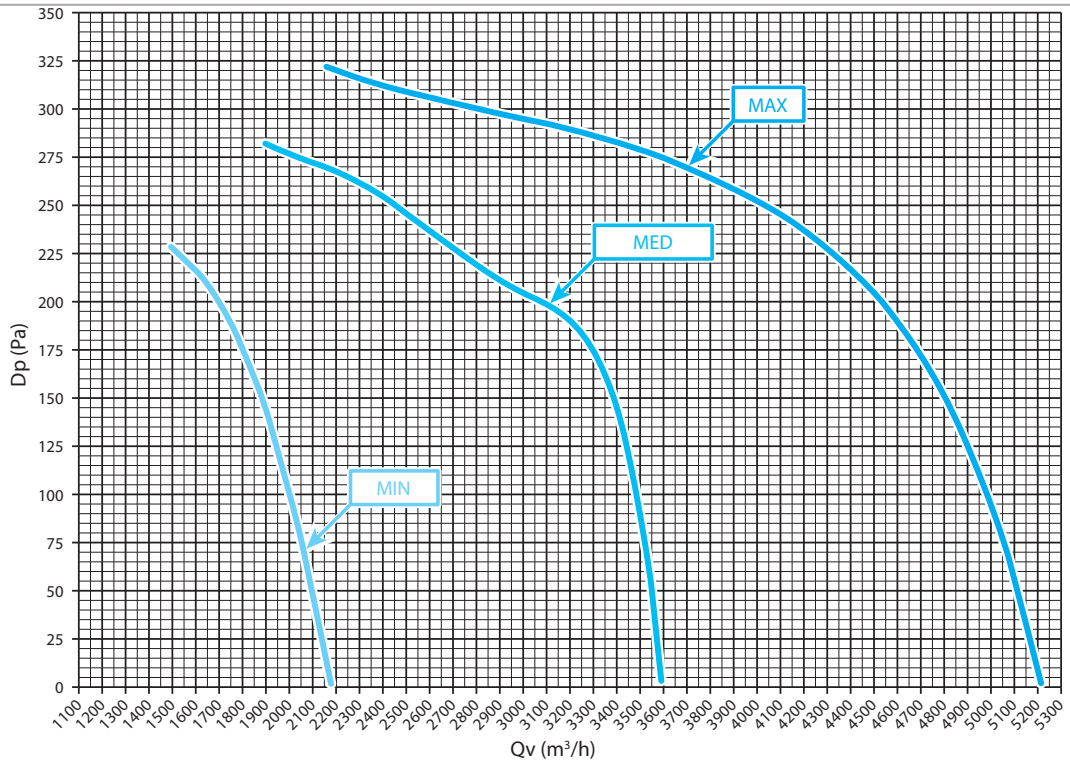

Dp = pressure drop
Qv = air flow
MAX = high
MED = medium
MIN = low

Pressure drop for DFCL 6 (Dp)

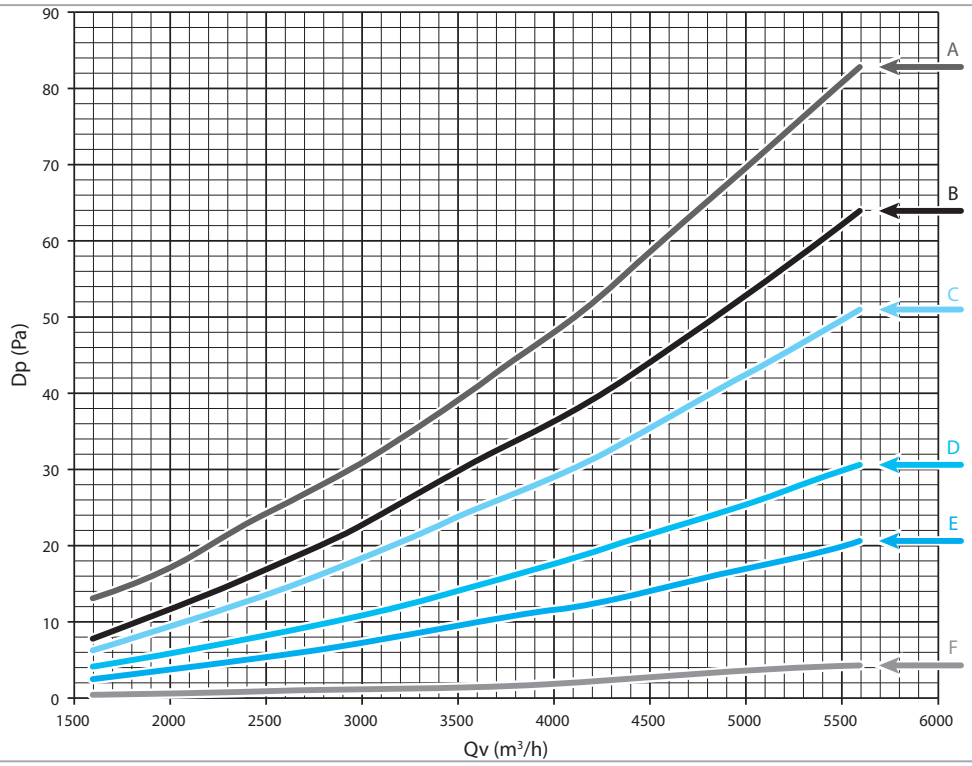

Dp = pressure drop
Qv = air flow
A = 98 mm F6 filter
B = 48 mm G4 filter
C = 6+2 row coil
D = 4+2 row coil
E = 6 row coil
F = Spigot plenum

Available pressure for DFCL 74 (with 4 row coil)

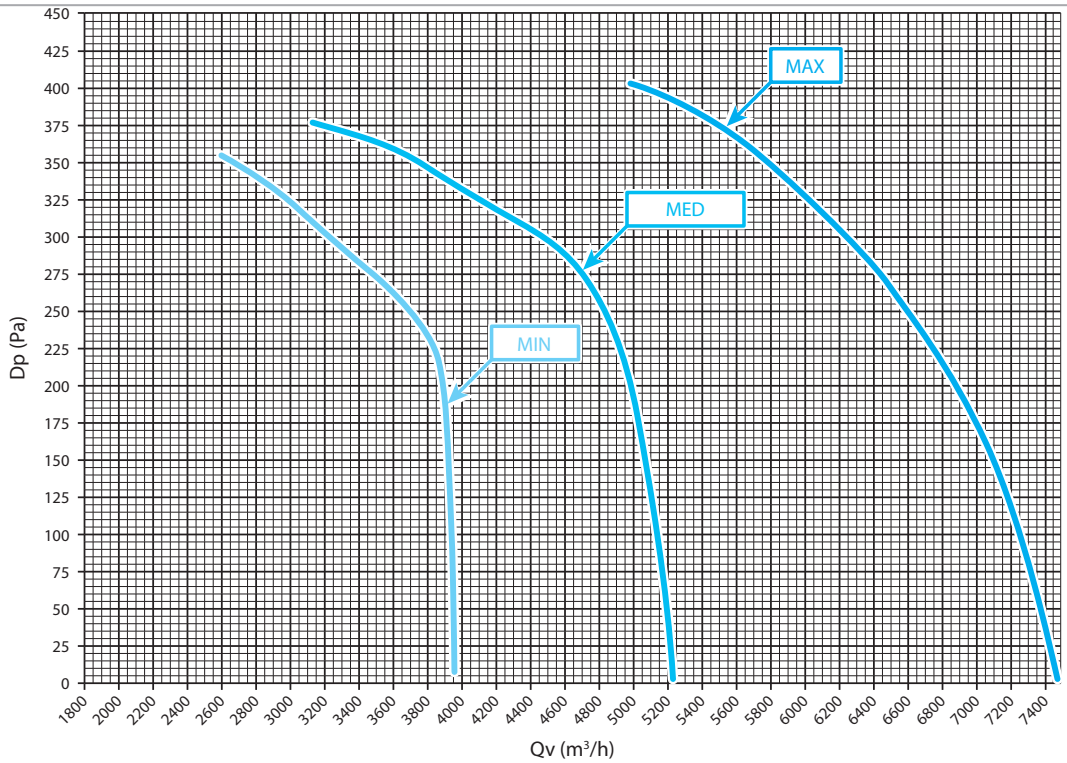

Dp = pressure drop
Qv = air flow
MAX = high
MED = medium
MIN = low

Pressure drop for DFCL 7 (Dp)

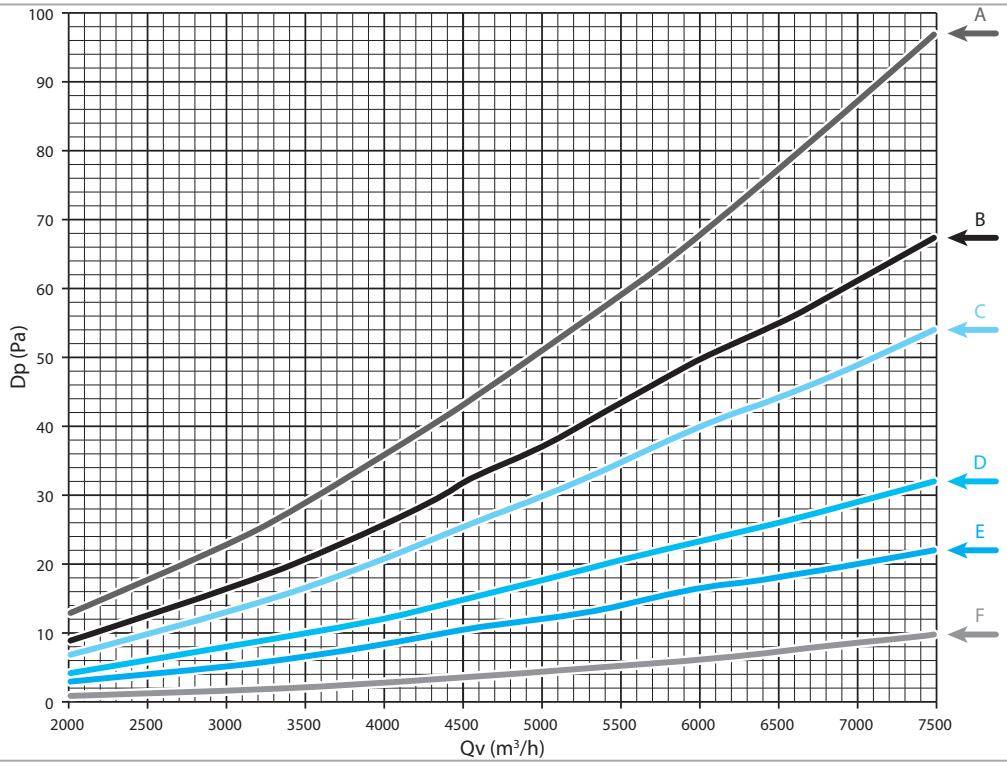

Dp = pressure drop
Qv = air flow
A = 98 mm F6 filter
B = 48 mm G4 filter
C = 6+2 row coil
D = 4+2 row coil
E = 6 row coil
F = Spigot plenum

CALCULATION EXAMPLE

Example of calculation of the emission at different speeds and air pressure drops

Model: DFCL 66+2

Installation characteristics:

Summer mode:
Air temperature: + 25 °C d.b. U.R. 50%
Water temperature: + 8 °C E.W.T. + 13 °C L.W.T.
Winter mode:
Air temperature: + 20 °C
Water temperature: + 60 °C E.W.T. + 50 °C L.W.T.
Requested air flow: 3400 m^3/h
Requested available pressure: 110 Pa

Emission of DFCL 66+2 working
- at medium speed (speed 2)
- with 0 Pa of available pressure
- with entering air temperature: 25 °C

- Reference air flow: 3570 m^3/h (page p. 32 - DFCL 66)
- Total emission: 18250 W (page p. 32 - DFCL 66)
- Sensible emission: 14950 W (page p. 32 - DFCL 66)
- Heating: 23900 W (page p. 33 - DFCL 6..+2)

Calculation of the emission at requested flow:

Define the "correction factor" between the requested air flow and the reference air flow rate:
Correction factor = requested air flow rate/reference air flow rate = 3400/3570 = 0,95

From Diagrams 1 and 2
define the "**variation in % of the emission**" using the correction factor calculated above.

- For the TOTAL emission = 0,97
- For the SENSIBLE emission = 0,96
- For the Heating = 0,96

The obtained emission for the unit is:

- TOTAL emission = 18250 x 0,97 = 17703 W
- SENSIBLE emission = 14950 x 0,96 = 14352 W
- Heating = 23900 x 0,96 = 22944 W

Correction diagram of cooling emission depending on air flow

Diagram 1 - Cooling emissions

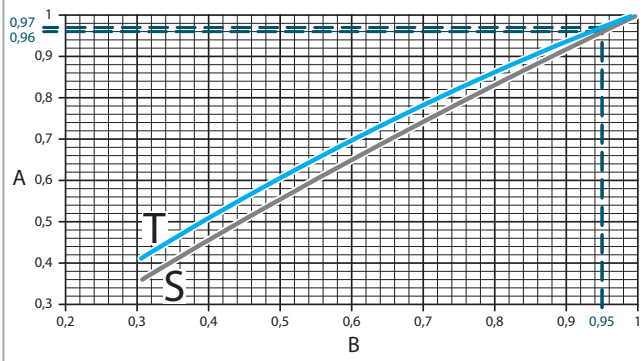

A = Emission %
B = Air flow %
T = total
S = sensible

Correction diagram of heating emission depending on air flow

Diagram 2 - Heating emission

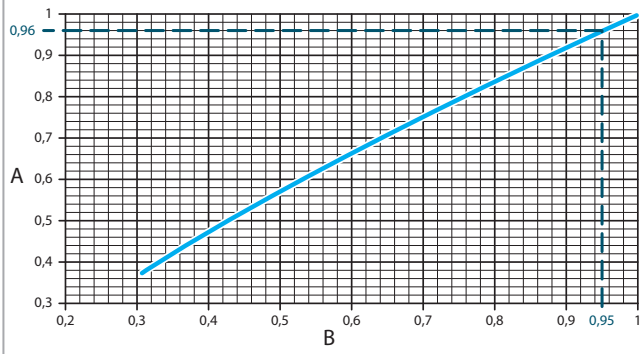

A = Emission %
B = Air flow %

Calculation of the pressure drop:

From the **"Pressure drop" Diagram of DFCL 64** with 3400 m³/h of air flow, we can find the pressure drop of the unit:

- ΔP air for the coil 6+2 = **22 Pa**
- ΔP air for the spigot plenum = **2 Pa**

The calculation is:

- ΔP total air of DFCL = 22+2 = **24 Pa**

Total pressure drop:

- **Spigot pressure drop + DFCL pressure drop = 110 Pa + 24 Pa = 134 Pa**

Diagram for DFCL 64 "Pressure drop"

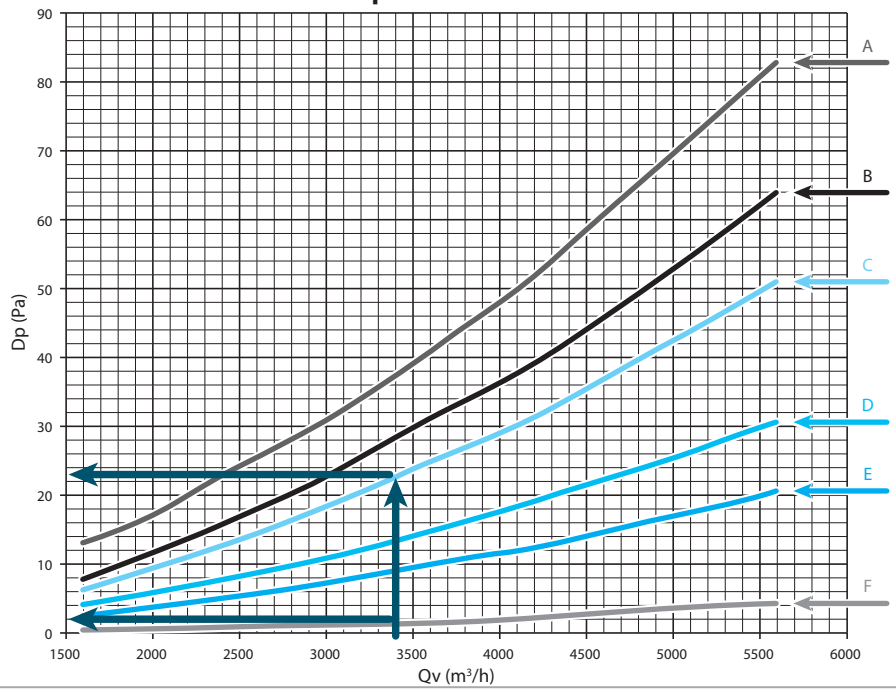

Dp = pressure drop
Qv = air flow
A = 98 mm F6 filter
B = 48 mm G4 filter
C = 6+2 row coil
D = 4+2 row coil
E = 6 row coil
F = Spigot plenum

From the **"Available pressure" Diagram of DFCL 64** working at medium speed and with 3400 m³/h of air flow, we can find:

- **Available pressure = 140 Pa = ~ 134 Pa**

Diagram for DFCL 64 "Available pressure"

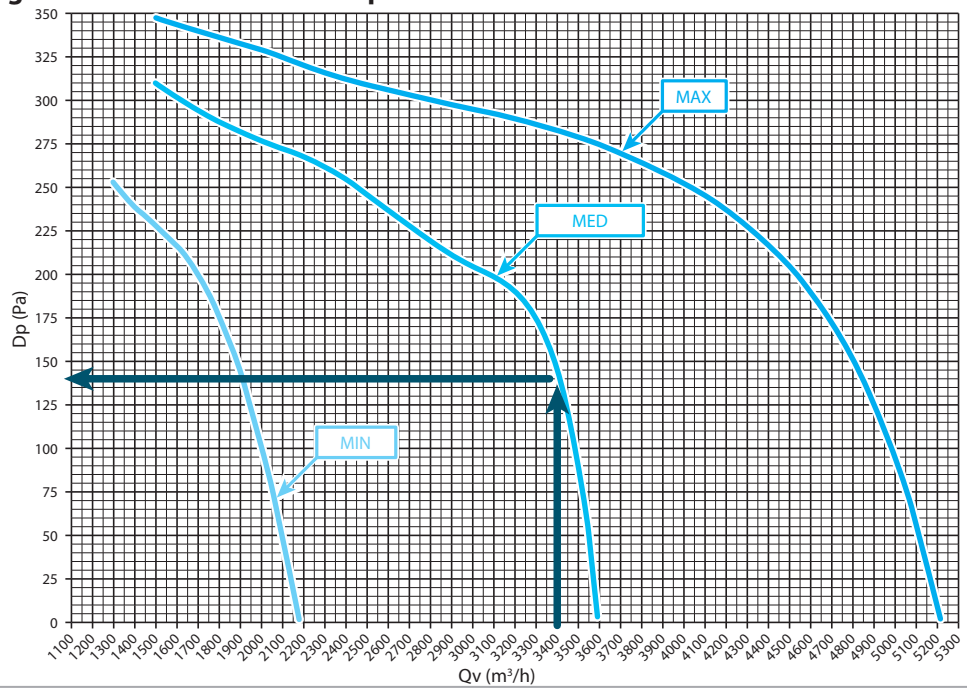

Dp = pressure drop
Qv = air flow
MAX = high
MED = medium
MIN = low

POWER ABSORPTION DEPENDING ON AIR FLOW

Power unit absorption (watt)

DFCL 6

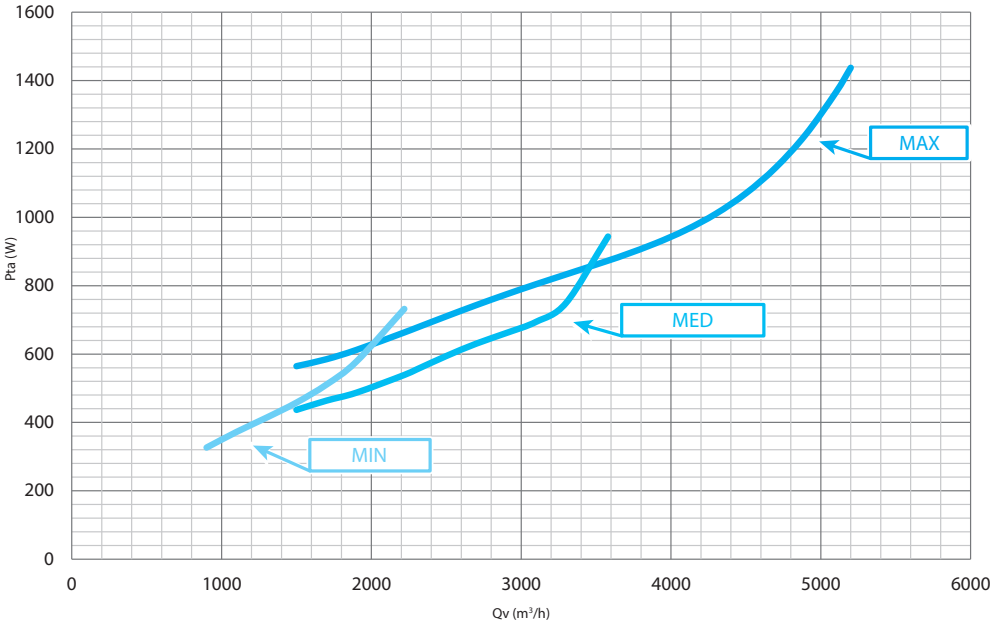

Pta = power unit absorption
Qv = air flow
MAX = high
MED = medium
MIN = low

DFCL 7

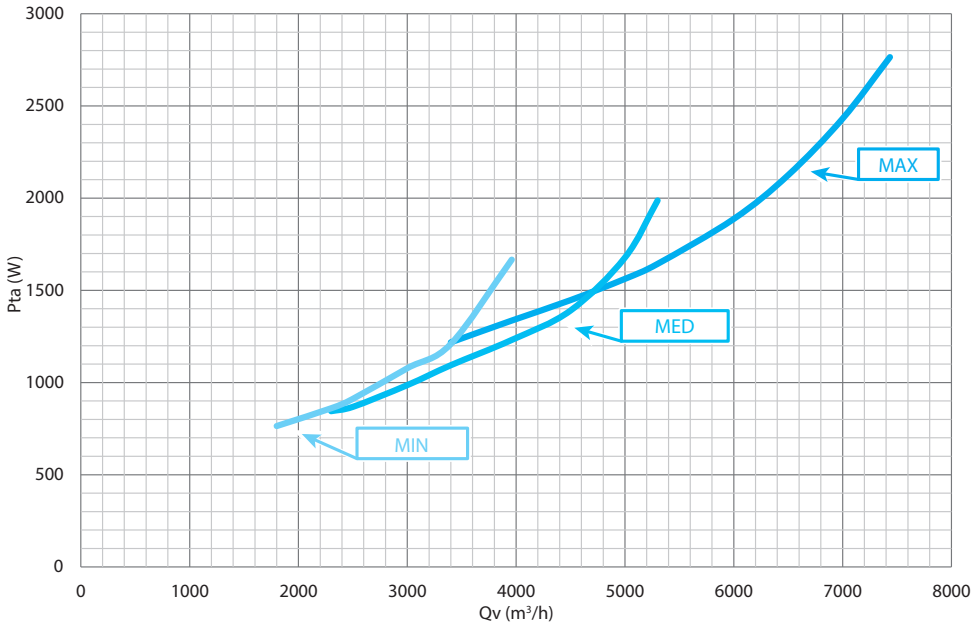

Pta = power unit absorption
Qv = air flow
MAX = high
MED = medium
MIN = low

WATER SIDE PRESSURE DROP AND OPERATING LIMITS

Water side pressure drop

2 pipe unit

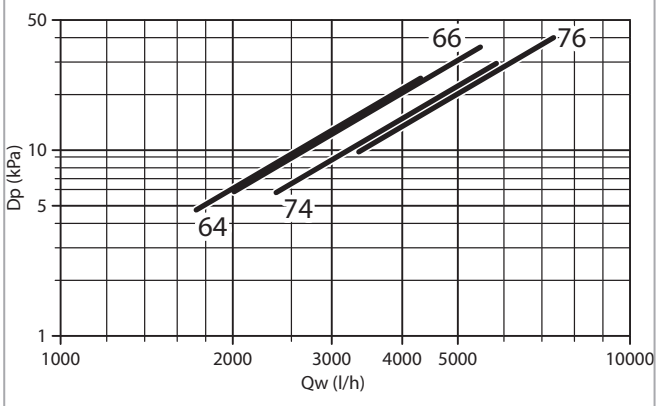

Dp = pressure drop
Qw = water flow rate

The water pressure drop figures refer to a mean water temperature of **10 °C** ; for different temperatures multiply the pressure drop figures by the correction factors **K** reported in the table below.

	Mean water temperature (°C)						
	20	30	40	50	60	70	80
K correction factor	0,94	0,90	0,86	0,82	0,78	0,74	0,70

4 pipe unit

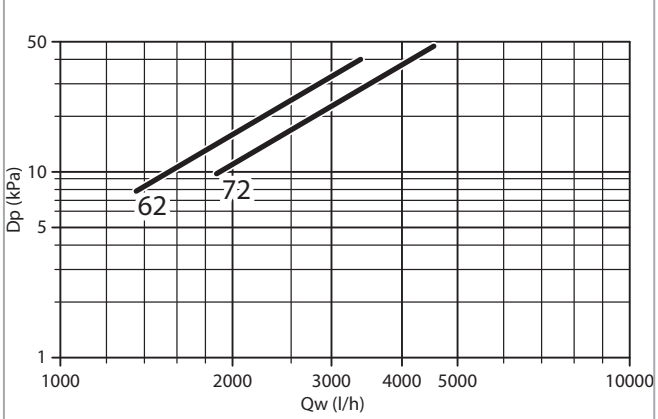

Dp = pressure drop
Qw = water flow rate

The water pressure drop figures refer to a mean water temperature of **65 °C**; for different temperatures, multiply the pressure drop figures by the correction factors **K**.

	Mean water temperature (°C)				
	40	50	60	70	80
K correction factor	1,14	1,08	1,02	0,96	0,90

Operation limits

Description		UoM	Value
Water flow	Coil maximum working pressure	bars	16
		kPa	1600
	Lowest water inlet temperature	°C	6
	Highest water inlet temperature	°C	80
Ambient air	Relative humidity	%	15-75
	Minimum temperature	°C	6
	Maximum temperature	°C	40
	MAX. leaving air temperature	**°C**	**50**
Power supply	Single-phase rated operating voltage	V/Hz	230/50

Motor electrical data - max. absorption

Model		DFCL 6	DFCL 7
230/1	W	1437	2817
50 Hz	A	6,38	12,40

DIMENSION, WEIGHT AND WATER CONTENT

Left configuration (standard)

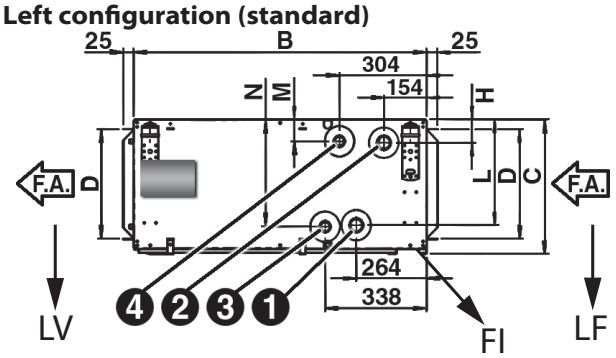

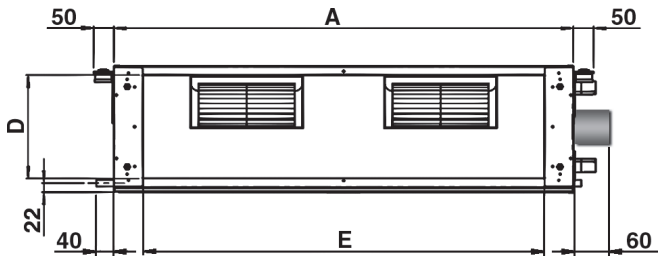

Right configuration (on demand)

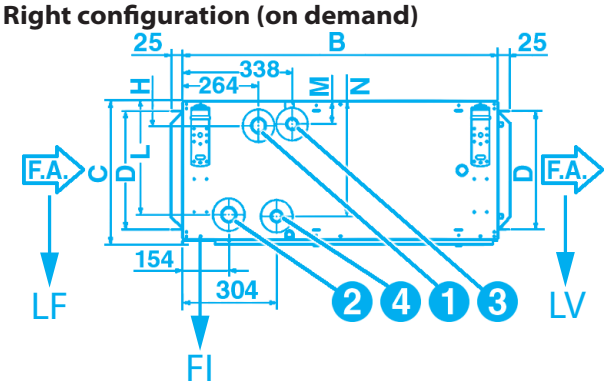

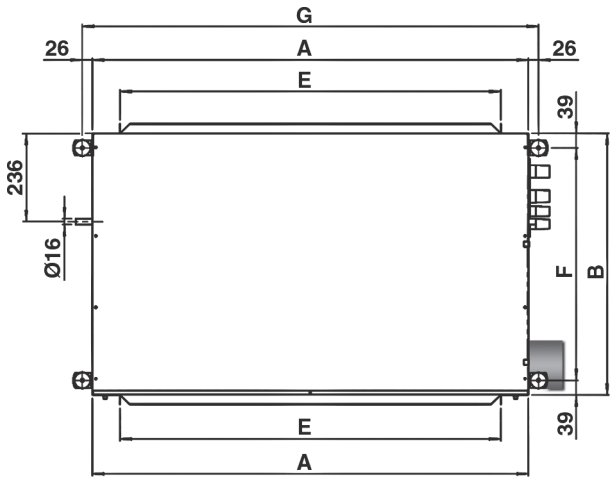

1 = main coil water inlet
2 = main coil water outlet
3 = additional coil water inlet
4 = additional coil water outlet
LV = fan side (outlet)
FI = filter
LF = filter side (inlet)
F.A. = air flow

Standard

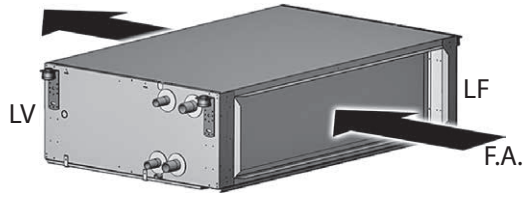

Coil connections on the left looking the air direction

Wiring terminal board

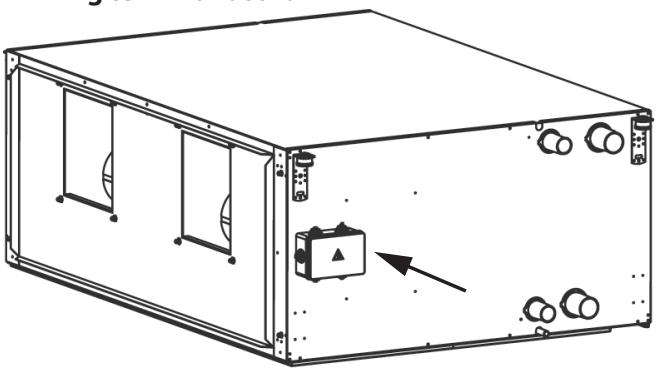

Dimensions

Model		DFCL 6	DFCL 7
A	mm	1535	1535
B	mm	1100	1100
C	mm	488	588
D	mm	421	521
E	mm	1393	1393
F	mm	1022	1022
G	mm	1587	1587
H	mm	59	59
L	mm	416	516
M	mm	55	55
N	mm	421	521

Coil connections

Model	Pos.	DFCL 6	DFCL 7
Main coil inlet	1	1 1/4"	1 1/4"
Main coil outlet	2	1 1/4"	1 1/4"
Additional coil inlet	3	1"	1"
Additional coil outlet	4	1"	1"

Packed unit

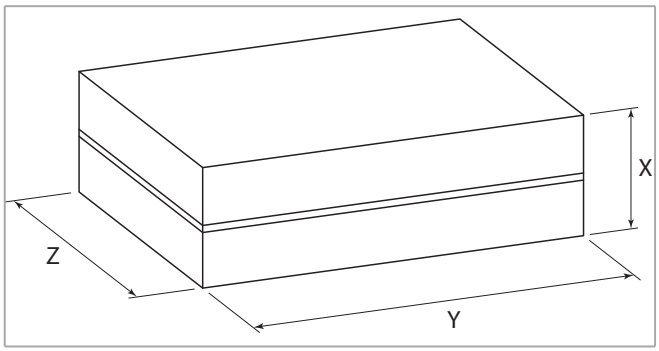

Model		DFCL 6	DFCL 7
X	mm	505	605
Y	mm	1695	
Z	mm	1207	

Weight (kg)

Weight without packaging

Model	DFCL 6	DFCL 7
4 rows	124	140
4+2 rows	134	152
6 rows	130	148
6+2 rows	140	160

Weight with packaging

Model	DFCL 6	DFCL 7
4 rows	127	143
4+2 rows	137	155
6 rows	133	151
6+2 rows	143	163

Water content (l)

Model	DFCL 6	DFCL 7
4 rows	7,6	9,7
6 rows	11,1	13,8
+2 rows	4,1	5,5

ELECTRONIC WALL CONTROLS

WM-3V

ID	Code
WM-3V	9066642

For Models 1-2 use only the WM-3V control code 9066642.

For Models 3-4-5-6 use the WM-3V control code 9066642 + SEL-S code 9079110.

For Model 7 use the WM-3V control code 9066642 + 2 speed switches SEL-S code 9079110.

- ON-OFF switch and 3 speed switch, without thermostatic control

Dimensions: 75x75x30 mm

WM-T

ID	Code
WM-T	9066630E

For Models 1-2 use only the WM-T control code 9066630E.

For Models 3-4-5-6 use the WM-T control code 9066630E + SEL-S code 9079110.

For Model 7 use the WM-T control code 9066630E + 2 speed switches SEL-S code 9079110.

- Manual 3 speed switch.
- Manual Summer/Winter switch.
- Electronic room thermostat for fan control (ON-OFF).
- Electronic room thermostat for water valve control (ON-OFF).
- It allows to control the low temperature cut-out thermostat (TMM).
- It allows to control the chilled water valve (ON-OFF) and the electric heater (BEM) only in case that hot water is not used in winter.
- Presence of a LED signal when the thermostat is on.

Control power absorption: 0,25 VA.

Dimensions: 135x86x31 mm

WM-TQR

ID	Code
WM-TQR	9066631E

For Models 1-2 use only the WM-TQR control code 9066631E.

For Models 3-4-5-6 use the WM-TQR control code 9066631E + SEL-S code 9079110.

For Model 7 use the WM-TQR control code 9066631E + 2 speed switches SEL-S code 9079110.

- Manual 3 speed switch.
- Manual, automatic or centralized Summer/Winter switch.
- Electric heater switch.
- Electronic room thermostat for fan control (ON-OFF).
- Electronic room thermostat for water valve control (ON-OFF).
- Simultaneous thermostatic control of the valves and fan.
- It allows to control the low temperature cut-out thermostat NTC.
- It allows to control the water valves (ON-OFF) and the electric heater managed as main heating element or as an integration element.
- Energy saving function.
- Presence of a LED signal when the thermostat is on.

Control power absorption: 1 VA.

Dimensions: 135x86x31 mm

COM

ID	Code
COM	9053022

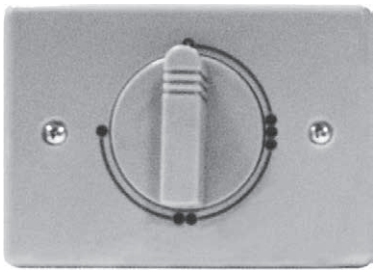

- Remote manual speed control.
- Commutator with 4 positions:

- OFF
- first speed
- second speed
- third speed

WM-AU

ID	Code
WM-AU	9066632E

The control must always be connected with UPO-AU power unit (to be ordered separately).

- Manual/automatic 3 speed switch.
- Manual, automatic or centralized Summer/Winter switch.
- Summer/Winter/Fan/Auto mode switch.
- Electronic room thermostat for fan and water valves control (ON-OFF).
- Simultaneous thermostatic control of the valves and fan.
- It allows to control the low temperature cut-out thermostat NTC.
- Energy saving function.

Control power absorption: see the UPO-AU power unit

Dimensions: 135x86x24 mm

T-MB2 SW

ID	Code
T-MB2 SW	9066994ESW

The control must always be connected with UPO-AU power unit (separately delivered).

Control with TFT 2,4" coloured graphic display for wall installation.

The main characteristics are:

- Management by keyboard
- Management of one single unit or of several units in Master/Slave mode
- ON/OFF switch
- Operation mode setting
- Setpoint configuration or setpoint variation by supervisory program (+/- 3°C of the set)
- Room temperature internal sensor, which can be defined as a priority compared to the return air sensor on the fan coil
- Fan speed switch
- Advanced daily/weekly ON/OFF programming with 3 pre-settable weekly programs
- Viewing and change of the operating mode parameters of the unit, alarm notification and information related to the unit
- Electric coil control
- Activation/deactivation of the room temperature display
- Possibility to use the T1 sensor which allows the return air control (fitted on the power unit)

Control power absorption: see the UPO-AU power unit

Dimensions: 115x75x20 mm

UPO-AU - Power unit for WM-AU and T-MB2 SW remote controls

Model	FITTED		NOT FITTED	
	ID	Code	ID	Code
1-2	UPOM1-AU	9034170	UPO1-AU	9034169
3-4-5-6-7	UPOM3-AU	9034180	UPO3-AU	9034179

Power unit to be installed on the end unit (fan coil interface).

- It controls the fan and the valves of the fan coil.
- It is connected to the electric supply.
- It receives the information required from the remote control.
- Possibility to use the LTCO low temperature cut-out thermostat (optional) for the air probe function which allows the return air control.
- Possibility to use the LTCO low temperature cut-out thermostat (optional) for the T2 function which controls the summer/winter switch.
- Possibility to use the low temperature cut-out thermostat (optional) for the T3 function as low temperature cut-out thermostat.
- It allows to control up to 10 units (1 master and 9 slaves).
- Max. Network length: 100 meters
- Max cable length between control and first connected power unit: 20 meters

Control power absorption: 2,3 VA

SEL-S - Speed switch (slave)

ID	Code
SEL-S	9079110

- It allows to control up to 8 units with only one centralized wall control (1 speed switch for each unit).
- For controls WM-3V, WM-T and WM-TQR.

Wall electronic controls accessories

TMM low temperature cut-out thermostat

ID	Code
TMM	9053048

To be installed in contact with the hot water circuit.
To be used only with WM-T control.
For units working on heating only.
It stops the fan when the water temperature is lower than 30 °C and it starts the fan when is higher than 38 °C.

NTC low temperature cut-out thermostat

ID	Code
NTC	3021090

To be fitted between the coil fins.
When connecting the control, the NTC probe cable must be separated from the power supply wires.
To be used only with WM-TQR control and the UPO-AU power-unit.
It stops the fan when the water temperature is lower than 28 °C and it starts the fan when is higher than 33 °C.

To use as:
- Probe function for the return air control.
- T2 function which controls the summer/winter switch (change-over).
- T3 function as low temperature cut-out thermostat.

T2 accessory

ID	Code
T2	9025310

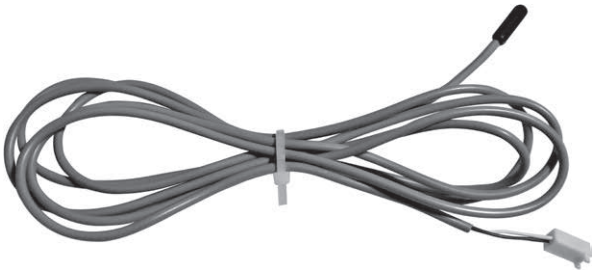

T2 probe, to be placed on the water supply pipe upstream 3 way valves (not to be used with 2 way valves).
The T2 probe must be used as described below:
- Change-Over for the automatic switch of the operating mode. If water temperature is lower than 20 °C, cooling mode is set; on the other hand, if water temperature exceeds 30 °C, heating mode is set.

To be used with UPO-AU power-unit.

Change-Over CH 15-25

ID	Code
CH 15-25	9053049

Automatic summer/winter switch to be installed in contact with the water circuit.
For 2 tube installations only (not to be used with 2 way valve).
To be used only with WM-TQR control.

CONSTRUCTION FEATURES

DFCL-ECM 1÷6 range with electronic motor and inverter board

The fan coil units of the **DFCL-ECM** range allow at very economical cost to heat and/or cool all civil, industrial, commercial or sports premises.

They are designed and built for installation in the suspended ceilings, concealed or ducted.

The DFCL-ECM units supply a consistent air flow with static pressure up to 160 Pa for the sizes 1÷5 and 240 Pa for the size 6.
The **DFCL-ECM 1÷5 sizes** can be equipped with a 3 or 4 row coil or with two 3+1 or 4+1 row coils (special executions 3+2 or 4+2 are on demand).
The **DFCL-ECM 6 size** can be equipped either with a 4 or 6 row coil or with two coils with 4+2 or 6+2 rows.

Compliant with Regulation (EU) No. 327/2011.

Casing

It is made with 1,0 mm galvanized steel for sizes 1 - 2 - 3 and with 1,2 mm galvanized steel for sizes 4 - 5 - 6, insulated with 10 mm polyolefin (PO) foam (B-s2-d0 EN 13501-1).

Fan assembly

Consists of quiet centrifugal fans with two impellers directly driven to the motor.

Electronic motor

Three phase permanent magnet brushless electronic motor that is controlled with current reconstructed according to a BLAC sinusoidal wave.
The inverter board that controls the motor operation is powered by 230 Volt, single-phase and, with a switching system, it generates a three-phase frequency modulated, wave form power supply.
The electric power supply required for the machine is therefore single-phase with voltage of 230 V and frequency of 50 - 60 Hz.

Coil

It is manufactured from drawn copper tube and the aluminium fins are mechanically bonded onto the tube by an expansion process.
The sizes **1÷5** can be equipped also with the combination of either 1 or 2 additional row coil (versions 3+1, 4+1, 3+2, 4+2 for 4 pipe installation systems). Whereas the size **6** can be equipped with an additional coil with 2 rows (version 4+2 and 6+2 for 4 pipe installation systems).

The connections are on the left side looking from the air inlet of the unit (see picture and drawing at p. 75).

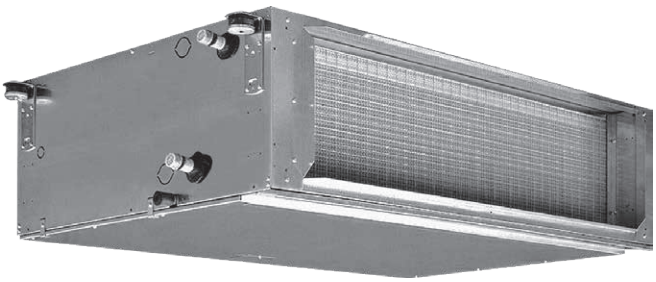

On request the connections can be moved to the other side. The coil is not suitable for use in corrosive atmosphere or in environments where aluminium may be subject to corrosion.

Filter

The filter is made of polypropylene cellular fabric regenerating filter. The filter frame of galvanized steel is inserted into sliding guides fastened to the internal structure for easy insertion and removal of the filter.

Condensate collection tray

It is made from galvanized steel insulated with 3 mm polyolefin (PO) foam (B-s2-d0 EN 13501-1).

TECHNICAL FEATURES - 2 PIPE UNIT

4 and 6 row coil unit

The following standard rating conditions are used:

COOLING

Entering air temperature: + 27 °C d.b. + 19 °C w.b.
Water temperature: +7 °C E.W.T. +12 °C L.W.T.

HEATING

Entering air temperature: + 20 °C
Water temperature: +45 °C E.W.T. +40 °C L.W.T.

MODEL		DFCL-ECM 14			DFCL-ECM 24			DFCL-ECM 34			DFCL-ECM 44		
Inverter power		4,5	7	9	4	6	8	4,5	6,5	8	5,5	7,5	10
		MIN	MED	MAX	MIN	MED	MAX	MIN	MED	MAX	MIN	MED	MAX
Air flow	m^3/h	780	1100	1310	940	1360	1780	1380	1950	2390	1840	2440	3080
Available pressure	Pa	26	50	70	24	50	85	25	50	75	28	50	80
Cooling total emission	kW	4,14	5,11	5,61	5,44	6,86	7,94	7,87	9,70	10,81	10,47	12,39	13,99
Cooling sensible emission	kW	3,24	4,18	4,72	4,08	5,36	6,44	5,93	7,61	8,72	7,90	9,65	11,23
Heating emission	kW	5,18	6,80	7,76	6,42	8,64	10,62	8,64	11,25	13,06	12,13	15,15	18,08
Dp Cooling	kPa	4,9	7,2	8,7	7,7	11,8	15,8	11,7	17,4	21,6	12,2	16,9	21,7
Dp Heating	kPa	6,5	10,7	13,7	7,5	12,9	18,8	10,1	16,4	21,4	11,6	17,4	23,9
Fan	W	40	88	144	44	110	225	80	195	340	110	253	530
Sound power outlet (Lw)	dB(A)	45	52	59	45	55	61	52	60	64	55	62	67
Sound power inlet + radiated (Lw)	dB(A)	48	55	61	48	57	63	55	62	66	58	64	69
Sound pressure level outlet (Lp) (1)	dB(A)	36	43	50	36	46	52	43	51	55	46	53	58
Sound pressure level inlet + radiated (Lp) (1)	dB(A)	39	46	52	39	48	54	46	53	57	49	55	60
Plenum code		9034200	9034200	9034200	9034200	9034200	9034200	9034220	9034220	9034220	9034230	9034230	9034230

MODEL		DFCL-ECM 54			DFCL-ECM 64			DFCL-ECM 66		
Inverter power		3	5	7	3	6	9	3	6	9
		MIN	MED	MAX	MIN	MED	MAX	MIN	MED	MAX
Air flow	m^3/h	2400	3320	3920	2825	4295	5205	2825	4295	5205
Available pressure	Pa	25	50	70	22	50	74	22	50	74
Cooling total emission	kW	13,73	16,70	18,17	16,91	21,91	24,30	20,36	27,20	30,64
Cooling sensible emission	kW	10,46	13,26	14,75	12,85	17,79	20,30	14,47	20,39	23,48
Heating emission	kW	15,90	20,51	23,25	18,63	25,83	29,76	20,74	29,57	34,54
Dp Cooling	kPa	12,3	17,9	21,4	15,9	25,9	31,8	21,3	36,6	46,1
Dp Heating	kPa	12,8	20,3	25,4	14,2	25,6	33,1	16,7	31,7	42,0
Fan	W	166	383	702	106	330	636	109	339	654
Sound power outlet (Lw)	dB(A)	58	67	71	57	69	73	57	69	73
Sound power inlet + radiated (Lw)	dB(A)	61	70	73	60	72	75	60	72	75
Sound pressure level outlet (Lp) (1)	dB(A)	49	58	62	48	60	64	48	60	64
Sound pressure level inlet + radiated (Lp) (1)	dB(A)	52	61	64	51	63	66	51	63	66
Plenum code		9034240	9034240	9034240	9034280	9034280	9034280	9034280	9034280	9034280

(1) The sound pressure levels are 9 dB (A) lower than the sound power levels, apply to the reverberant field of a 100 m^3 room and a reverberation time of 0.5 sec.

TECHNICAL FEATURES - 4 PIPE UNIT

4 and 6 row coil unit with 1 or 2 additional row coil

The following standard rating conditions are used:

COOLING
Entering air temperature: + 27 °C d.b. + 19 °C w.b.
Water temperature: +7 °C E.W.T. +12 °C L.W.T.

HEATING
Entering air temperature: + 20 °C
Water temperature: +65 °C E.W.T. +55 °C L.W.T.

MODEL		DFCL-ECM 14+1			DFCL-ECM 24+1			DFCL-ECM 34+1			DFCL-ECM 44+1		
Inverter power		4,5	7	9	4	6	8	4,5	6,5	8	5,5	7,5	10
		MIN	MED	MAX	MIN	MED	MAX	MIN	MED	MAX	MIN	MED	MAX
Air flow	m^3/h	750	1040	1250	920	1340	1750	1350	1920	2350	1810	2400	3040
Available pressure	Pa	26	50	72	24	50	85	25	50	75	28	50	80
Cooling total emission	kW	4,04	4,94	5,46	5,36	6,79	7,87	7,76	9,59	10,70	10,36	12,27	13,90
Cooling sensible emission	kW	3,14	4,01	4,55	4,01	5,30	6,35	5,83	7,51	8,61	7,79	9,53	11,13
Heating emission	kW	3,43	4,18	4,62	4,33	5,42	6,25	5,90	7,20	8,02	8,06	9,48	10,75
Dp Cooling	kPa	4,6	6,8	8,3	7,5	11,6	15,5	11,4	17,1	21,2	12,0	16,6	21,4
Dp Heating	kPa	9,4	13,4	16,0	13,6	20,4	26,4	9,9	14,3	17,3	19,6	26,3	33,0
Fan	W	40	88	144	44	115	225	80	200	340	110	253	530
Sound power outlet (Lw)	dB(A)	45	52	59	45	55	61	52	60	64	55	62	67
Sound power inlet + radiated (Lw)	dB(A)	48	55	61	48	57	63	55	62	66	58	64	69
Sound pressure level outlet (Lp) (1)	dB(A)	36	43	50	36	46	52	43	51	55	46	53	58
Sound pressure level inlet + radiated (Lp) (1)	dB(A)	39	46	52	39	48	54	46	53	57	49	55	60
Plenum code		9034200	9034200	9034200	9034200	9034200	9034200	9034220	9034220	9034220	9034230	9034230	9034230

MODEL		DFCL-ECM 54+1			DFCL-ECM 64+2			DFCL-ECM 66+2		
Inverter power		3	5	7	3	6	9	3	6	9
		MIN	MED	MAX	MIN	MED	MAX	MIN	MED	MAX
Air flow	m^3/h	2380	3300	3860	2790	4235	5140	2750	4190	5090
Available pressure	Pa	26	50	68	21	50	73	22	50	74
Cooling total emission	kW	13,66	16,62	18,00	16,77	21,71	24,10	20,08	26,91	30,34
Cooling sensible emission	kW	10,39	13,19	14,58	12,72	17,59	20,09	14,26	20,13	23,20
Heating emission	kW	10,53	12,67	13,77	23,20	30,58	34,54	22,98	30,38	34,35
Dp Cooling	kPa	11,2	16,3	19,4	15,7	25,4	31,4	20,8	35,9	45,4
Dp Heating	kPa	18,5	25,7	29,9	20,1	33,2	41,3	19,8	32,8	40,8
Fan	W	168	384	695	110	343	661	115	352	678
Sound power outlet (Lw)	dB(A)	58	67	71	57	69	73	57	69	73
Sound power inlet + radiated (Lw)	dB(A)	61	70	73	60	72	75	60	72	75
Sound pressure level outlet (Lp) (1)	dB(A)	49	58	62	48	60	64	48	60	64
Sound pressure level inlet + radiated (Lp) (1)	dB(A)	52	61	64	51	63	66	51	63	66
Plenum code		9034240	9034240	9034240	9034280	9034280	9034280	9034280	9034280	9034280

(1) The sound pressure levels are 9 dB (A) lower than the sound power levels, apply to the reverberant field of a 100 m^3 room and a reverberation time of 0.5 sec.

MAIN PERFORMANCES AND TECHNICAL CHARACTERISTICS

3 row coil - 2 pipe units

The following standard rating conditions are used:

COOLING
Entering air temperature: + 27 °C d.b. + 19 °C w.b.
Water temperature: +7 °C E.W.T. +12 °C L.W.T.

HEATING
Entering air temperature: + 20 °C
Water temperature: +45 °C E.W.T. +40 °C L.W.T.

Available pressure: 0 Pa

MODEL		DFCL-ECM 13					DFCL-ECM 23					DFCL-ECM 33				
Inverter power		1	3	5	7,5	10	1	3	5	7,5	10	1	3	5	7,5	10
Air flow	m^3/h	505	950	1280	1580	1800	640	970	1375	2030	2625	760	1190	1750	2565	3390
Cooling total emission	kW	3,00	4,05	4,78	5,33	5,69	3,70	4,82	5,91	7,22	8,12	4,54	6,05	7,57	9,21	10,41
Cooling sensible emission	kW	2,37	3,44	4,22	4,88	5,33	2,78	3,79	4,83	6,27	7,38	3,36	4,71	6,16	7,94	9,42
Heating emission	kW	3,42	4,93	6,08	7,01	7,63	3,97	5,46	7,05	9,23	10,92	4,75	6,71	8,89	11,57	13,88
Dp Cooling	kPa	4,5	7,8	10,7	13,1	14,9	6,4	10,4	15,1	22,3	28,6	6,6	11,1	16,9	24,8	32,4
Dp Heating	kPa	4,3	8,3	12,1	15,7	18,3	5,4	9,6	15,2	24,8	33,6	5,3	9,9	16,5	26,6	36,9
Fan	W	10	27	57	94	148	12	29	65	188	362	13	30	83	256	531
Sound power (Lw)	dB(A)	35,0	44,0	49,0	56,0	60,0	39,0	46,0	53,0	61,0	69,0	41,0	48,0	56,0	64,0	70,0
Sound pressure (Lp) (1)	dB(A)	26,0	35,0	40,0	47,0	51,0	30,0	37,0	44,0	52,0	60,0	32,0	39,0	47,0	55,0	61,0

MODEL		DFCL-ECM 43					DFCL-ECM 53				
Inverter power		1	3	5	7,5	10	1	3	5	7,5	10
Air flow	m^3/h	745	1275	1890	2730	3535	1495	2605	3580	4400	5160
Cooling total emission	kW	4,83	6,99	8,89	10,84	12,26	8,60	12,13	14,37	15,83	16,90
Cooling sensible emission	kW	3,48	5,29	7,01	8,98	10,56	6,52	9,93	12,16	13,86	15,22
Heating emission	kW	5,17	8,01	10,84	14,15	16,91	9,71	14,92	18,77	21,62	24,04
Dp Cooling	kPa	5,0	9,8	15,3	22,4	28,9	8,8	16,6	23,2	28,4	33,2
Dp Heating	kPa	3,2	7,2	12,4	20,2	27,8	8,8	19,3	29,2	37,8	45,9
Fan	W	12	30	76	219	484	41	139	340	636	1020
Sound power (Lw)	dB(A)	39,0	48,0	56,0	64,0	69,0	48,0	61,0	70,0	75,0	79,0
Sound pressure (Lp) (1)	dB(A)	30,0	39,0	47,0	55,0	60,0	39,0	52,0	61,0	66,0	70,0

(1) The sound pressure levels are 9 dB(A) lower than the sound power levels, apply to the reverberant field of a 100 m^3 room and a reverberation time of 0.5 sec.

4 row coil - 2 pipe units

The following standard rating conditions are used:

COOLING
Entering air temperature: + 27 °C d.b. + 19 °C w.b.
Water temperature: +7 °C E.W.T. +12 °C L.W.T.

HEATING
Entering air temperature: + 20 °C
Water temperature: +45 °C E.W.T. +40 °C L.W.T.

Available pressure: 0 Pa

MODEL		DFCL-ECM 14					DFCL-ECM 24					DFCL-ECM 34				
Inverter power		1	3	5	7,5	10	1	3	5	7,5	10	1	3	5	7,5	10
Air flow	m^3/h	460	870	1190	1520	1750	620	930	1345	1980	2580	740	1170	1720	2525	3290
Cooling total emission	kW	2,90	4,46	5,39	6,17	6,64	4,09	5,42	6,85	8,50	9,67	5,13	7,09	9,08	11,24	12,79
Cooling sensible emission	kW	2,16	3,57	4,47	5,32	5,86	2,97	4,09	5,36	7,02	8,32	3,67	5,29	7,03	9,16	10,87
Heating emission	kW	3,33	5,65	7,22	8,67	9,59	4,51	6,36	8,56	11,48	13,90	5,19	7,57	10,23	13,59	16,36
Dp Cooling	kPa	2,5	5,5	7,8	10,1	11,6	4,5	7,6	11,7	17,6	23,0	5,3	9,6	15,1	22,9	29,9
Dp Heating	kPa	2,4	6,2	9,7	13,5	16,2	4,0	7,4	12,7	21,7	30,6	4,0	8,0	13,8	23,1	32,2
Fan	W	10	26	55	104	154	12	25	65	183	371	13	30	85	264	541
Sound power (Lw)	dB(A)	35,0	44,0	49,0	56,0	60,0	39,0	46,0	53,0	61,0	69,0	41,0	48,0	56,0	64,0	70,0
Sound pressure (Lp) (1)	dB(A)	26,0	35,0	40,0	47,0	51,0	30,0	37,0	44,0	52,0	60,0	32,0	39,0	47,0	55,0	61,0

MODEL		DFCL-ECM 44					DFCL-ECM 54					DFCL-ECM 64				
Inverter power		1	3	5	7,5	10	1	3	5	7,5	10	1	3	5	7,5	10
Air flow	m^3/h	730	1250	1860	2690	3475	1480	2580	3550	4355	5095	1740	2900	3965	4940	5945
Cooling total emission	kW	5,39	8,09	10,58	13,18	15,06	9,89	14,43	17,43	19,41	20,88	12,05	17,22	20,95	23,74	26,11
Cooling sensible emission	kW	3,78	5,91	7,99	10,42	12,33	7,21	11,24	14,00	16,07	17,73	8,68	13,29	16,83	19,69	22,31
Heating emission	kW	5,53	8,81	12,24	16,33	19,76	10,64	16,85	21,58	25,12	28,13	12,47	19,03	24,31	28,65	32,77
Dp Cooling	kPa	3,6	7,5	12,3	18,8	24,6	6,7	13,5	19,3	23,9	28,1	8,5	16,4	23,6	30,1	36,5
Dp Heating	kPa	2,8	6,5	11,8	19,9	28,1	6,2	14,2	22,2	29,2	35,9	6,8	14,7	22,9	30,9	39,4
Fan	W	12	30	78	226	505	41	144	346	644	1031	28	93	214	442	816
Sound power (Lw)	dB(A)	39,0	48,0	56,0	64,0	69,0	48,0	61,0	70,0	75,0	79,0	47,5	62,0	70,0	74,5	78,0
Sound pressure (Lp) (1)	dB(A)	30,0	39,0	47,0	55,0	60,0	39,0	52,0	61,0	66,0	70,0	38,5	53,0	61,0	65,5	69,0

(1) The sound pressure levels are 9 dB(A) lower than the sound power levels, apply to the reverberant field of a 100 m^3 room and a reverberation time of 0.5 sec.

6 row coil - 2 pipe units

The following standard rating conditions are used:

COOLING
Entering air temperature: + 27 °C d.b. + 19 °C w.b.
Water temperature: +7 °C E.W.T. +12 °C L.W.T.

HEATING
Entering air temperature: + 20 °C
Water temperature: +45 °C E.W.T. +40 °C L.W.T.

MODEL		DFCL-ECM 66				
Inverter power		1	3	5	7,5	10
Air flow	m^3/h	1725	2880	3940	4910	5905
Cooling total emission	kW	14,00	20,80	25,92	29,83	33,24
Cooling sensible emission	kW	9,58	15,02	19,28	22,75	25,94
Heating emission	kW	13,37	21,04	27,39	32,73	37,81
Dp Cooling	kPa	10,7	22,2	33,3	43,5	53,8
Dp Heating	kPa	7,5	17,1	27,6	38,2	49,6
Fan	W	28	97	222	453	839
Sound power (Lw)	dB(A)	47,5	62,0	70,0	74,5	78,0
Sound pressure (Lp) (1)	dB(A)	38,5	53,0	61,0	65,5	69,0

(1) The sound pressure levels are 9 dB(A) lower than the sound power levels, apply to the reverberant field of a 100 m^3 room and a reverberation time of 0.5 sec.

3+1 row coil - 4 pipe units

The following standard rating conditions are used:

COOLING
Entering air temperature: + 27 °C d.b. + 19 °C w.b.
Water temperature: +7 °C E.W.T. +12 °C L.W.T.

HEATING
Entering air temperature: + 20 °C
Water temperature: +65 °C E.W.T. +55 °C L.W.T.

Available pressure: 0 Pa

MODEL		DFCL-ECM 13+1					DFCL-ECM 23+1					DFCL-ECM 33+1				
Inverter power		1	3	5	7,5	10	1	3	5	7,5	10	1	3	5	7,5	10
Air flow	m^3/h	460	870	1190	1520	1750	620	930	1345	1980	2580	740	1170	1720	2525	3290
Cooling total emission	kW	2,57	3,83	4,58	5,18	5,55	3,62	4,70	5,83	7,12	8,03	4,45	5,98	7,49	9,11	10,22
Cooling sensible emission	kW	1,98	3,21	3,99	4,71	5,17	2,71	3,68	4,76	6,16	7,27	3,29	4,65	6,08	7,83	9,19
Heating emission	kW	2,51	3,76	4,50	5,13	5,52	3,36	4,35	5,43	6,67	7,61	4,03	5,40	6,78	8,31	9,50
Dp Cooling	kPa	3,4	7,1	9,8	12,6	14,4	6,1	9,9	14,8	21,9	28,1	6,4	10,9	16,6	24,5	31,5
Dp Heating	kPa	5,3	11,1	15,3	19,3	22,1	8,6	13,8	20,5	29,7	37,5	5,0	8,5	12,9	18,5	23,4
Fan	W	10	26	55	104	154	12	25	65	183	371	13	30	85	264	541
Sound power (Lw)	dB(A)	35,0	44,0	49,0	56,0	60,0	39,0	46,0	53,0	61,0	69,0	41,0	48,0	56,0	64,0	70,0
Sound pressure (Lp) (1)	dB(A)	26,0	35,0	40,0	47,0	51,0	30,0	37,0	44,0	52,0	60,0	32,0	39,0	47,0	55,0	61,0

MODEL		DFCL-ECM 43+1					DFCL-ECM 53+1				
Inverter power		1	3	5	7,5	10	1	3	5	7,5	10
Air flow	m^3/h	730	1250	1860	2690	3475	1480	2580	3550	4355	5095
Cooling total emission	kW	4,76	6,91	8,81	10,75	12,12	8,54	12,04	14,31	15,74	16,80
Cooling sensible emission	kW	3,43	5,22	6,92	8,89	10,40	6,47	9,85	12,09	13,75	15,08
Heating emission	kW	4,50	6,39	8,20	10,07	11,52	7,79	11,05	13,17	14,69	15,93
Dp Cooling	kPa	4,9	9,6	15,1	22,1	28,5	8,7	16,5	23,0	28,2	32,9
Dp Heating	kPa	6,8	12,9	20,2	29,4	37,4	10,7	20,1	27,6	33,6	38,8
Fan	W	12	30	78	226	505	41	144	346	644	1031
Sound power (Lw)	dB(A)	39,0	48,0	56,0	64,0	69,0	48,0	61,0	70,0	75,0	79,0
Sound pressure (Lp) (1)	dB(A)	30,0	39,0	47,0	55,0	60,0	39,0	52,0	61,0	66,0	70,0

(1) The sound pressure levels are 9 dB(A) lower than the sound power levels, apply to the reverberant field of a 100 m^3 room and a reverberation time of 0.5 sec.

4+1 row coil - 4 pipe units

The following standard rating conditions are used:

COOLING

Entering air temperature: + 27 °C d.b. + 19 °C w.b.
Water temperature: +7 °C E.W.T. +12 °C L.W.T.

HEATING

Entering air temperature: + 20 °C
Water temperature: +65 °C E.W.T. +55 °C L.W.T.

MODEL		DFCL-ECM 14+1					DFCL-ECM 24+1					DFCL-ECM 34+1				
Inverter power		1	3	5	7,5	10	1	3	5	7,5	10	1	3	5	7,5	10
Air flow	m^3/h	420	810	1130	1475	1710	600	900	1320	1945	2542	710	1150	1690	2492	3215
Cooling total emission	kW	2,71	4,26	5,22	6,06	6,54	4,00	5,30	6,77	8,40	9,59	4,97	7,00	8,97	11,15	12,61
Cooling sensible emission	kW	2,00	3,38	4,29	5,19	5,75	2,89	3,99	5,28	6,92	8,23	3,54	5,21	6,93	9,07	10,67
Heating emission	kW	2,36	3,60	4,37	5,05	5,45	3,29	4,27	5,38	6,61	7,55	3,92	5,34	6,73	8,26	9,38
Dp Cooling	kPa	2,2	5,1	7,4	9,8	11,5	4,3	7,3	11,4	17,3	22,6	5,0	9,4	14,8	22,6	29,2
Dp Heating	kPa	4,8	10,2	14,5	18,8	21,6	8,3	13,3	20,1	29,2	37,0	4,8	8,3	12,6	18,3	23,0
Fan	W	10	25	64	117	158	12	25	66	182	377	13	31	87	268	544
Sound power (Lw)	dB(A)	35,0	44,0	49,0	56,0	60,0	39,0	46,0	53,0	61,0	69,0	41,0	48,0	56,0	64,0	70,0
Sound pressure (Lp) (1)	dB(A)	26,0	35,0	40,0	47,0	51,0	30,0	37,0	44,0	52,0	60,0	32,0	39,0	47,0	55,0	61,0

MODEL		DFCL-ECM 44+1					DFCL-ECM 54+1				
Inverter power		1	3	5	7,5	10	1	3	5	7,5	10
Air flow	m^3/h	720	1230	1835	2660	3425	1460	2555	3525	4315	5045
Cooling total emission	kW	5,33	8,00	10,48	13,10	14,92	9,79	14,34	17,35	19,31	20,74
Cooling sensible emission	kW	3,74	5,83	7,91	10,33	12,19	7,13	11,16	13,91	15,95	17,58
Heating emission	kW	4,45	6,32	8,13	10,02	11,43	7,72	11,00	13,12	14,62	15,85
Dp Cooling	kPa	3,5	7,4	12,1	18,6	24,2	6,0	12,2	17,6	21,8	25,6
Dp Heating	kPa	6,7	12,7	19,9	29,1	36,8	10,5	20,0	27,4	33,3	38,5
Fan	W	13	31	79	231	518	41	148	355	650	1036
Sound power (Lw)	dB(A)	39,0	48,0	56,0	64,0	69,0	48,0	61,0	70,0	75,0	79,0
Sound pressure (Lp) (1)	dB(A)	30,0	39,0	47,0	55,0	60,0	39,0	52,0	61,0	66,0	70,0

(1) The sound pressure levels are 9 dB(A) lower than the sound power levels, apply to the reverberant field of a 100 m^3 room and a reverberation time of 0.5 sec.

4+2 row coil - 4 pipe units

The following standard rating conditions are used:

COOLING
Entering air temperature: + 27 °C d.b. + 19 °C w.b.
Water temperature: +7 °C E.W.T. +12 °C L.W.T.

HEATING
Entering air temperature: + 20 °C
Water temperature: +65 °C E.W.T. +55 °C L.W.T.

Available pressure: 0 Pa

MODEL		DFCL-ECM 14+2					DFCL-ECM 24+2					DFCL-ECM 34+2				
Inverter power		1	3	5	7,5	10	1	3	5	7,5	10	1	3	5	7,5	10
Air flow	m^3/h	400	740	1055	1405	1650	570	865	1285	1895	2485	690	1125	1645	2441	3120
Cooling total emission	kW	2,65	4,08	5,11	6,00	6,54	3,90	5,24	6,78	8,45	9,68	4,86	6,90	8,82	11,01	12,42
Cooling sensible emission	kW	1,94	3,20	4,16	5,10	5,71	2,80	3,92	5,26	6,92	8,27	3,46	5,12	6,79	8,93	10,45
Heating emission	kW	4,49	7,16	9,16	11,07	12,26	6,37	8,75	11,61	15,03	17,83	7,69	11,13	14,57	18,89	22,02
Dp Cooling	kPa	2,1	4,7	7,1	9,6	11,4	4,1	7,1	11,4	17,5	23,0	4,8	9,1	14,4	22,1	28,4
Dp Heating	kPa	3,2	7,4	11,6	16,3	19,6	7,0	12,5	20,9	33,4	45,5	3,8	7,4	12,0	19,3	25,4
Fan	W	9	24	52	110	164	12	26	67	182	382	13	31	89	274	542
Sound power (Lw)	dB(A)	35,0	44,0	49,0	56,0	60,0	39,0	46,0	53,0	61,0	69,0	41,0	48,0	56,0	64,0	70,0
Sound pressure (Lp) (1)	dB(A)	26,0	35,0	40,0	47,0	51,0	30,0	37,0	44,0	52,0	60,0	32,0	39,0	47,0	55,0	61,0

MODEL		DFCL-ECM 44+2					DFCL-ECM 54+2					DFCL-ECM 64+2				
Inverter power		1	3	5	7,5	10	1	3	5	7,5	10	1	3	5	7,5	10
Air flow	m^3/h	700	1200	1800	2612	3355	1450	2525	3485	4260	4970	1700	2870	3925	4895	5885
Cooling total emission	kW	5,21	7,85	10,34	12,96	14,75	9,74	14,22	17,22	19,13	20,56	12,02	17,45	21,26	24,14	26,58
Cooling sensible emission	kW	3,65	5,72	7,78	10,19	12,00	7,09	11,06	13,78	15,77	17,38	8,61	13,38	16,97	19,88	22,53
Heating emission	kW	8,35	12,75	17,20	22,18	26,11	15,42	23,10	28,66	32,65	35,93	16,34	23,65	29,13	33,50	37,50
Dp Cooling	kPa	2,8	5,9	9,9	15,1	19,7	6,0	12,0	17,4	21,5	25,2	8,5	16,8	24,3	31,0	37,8
Dp Heating	kPa	5,6	12,0	20,6	32,8	44,1	9,6	19,9	29,5	37,3	44,4	10,6	20,8	30,4	39,1	47,9
Fan	W	13	32	81	237	529	42	152	363	656	1042	29	98	227	459	850
Sound power (Lw)	dB(A)	39,0	48,0	56,0	64,0	69,0	48,0	61,0	70,0	75,0	79,0	47,5	62,0	70,0	74,5	78,0
Sound pressure (Lp) (1)	dB(A)	30,0	39,0	47,0	55,0	60,0	39,0	52,0	61,0	66,0	70,0	38,5	53,0	61,0	65,5	69,0

(1) The sound pressure levels are 9 dB(A) lower than the sound power levels, apply to the reverberant field of a 100 m^3 room and a reverberation time of 0.5 sec.

6+2 row coil - 4 pipe units

The following standard rating conditions are used:

COOLING
Entering air temperature: + 27 °C d.b. + 19 °C w.b.
Water temperature: +7 °C E.W.T. +12 °C L.W.T.

HEATING
Entering air temperature: + 20 °C
Water temperature: +65 °C E.W.T. +55 °C L.W.T.

MODEL		DFCL-ECM 66+2				
Inverter power		1	3	5	7,5	10
Air flow	m^3/h	1685	2845	3900	4865	5840
Cooling total emission	kW	13,72	20,61	25,72	29,65	32,95
Cooling sensible emission	kW	9,38	14,87	19,11	22,58	25,67
Heating emission	kW	16,22	23,53	29,03	33,37	37,34
Dp Cooling	kPa	10,4	21,8	32,9	43,0	53,2
Dp Heating	kPa	10,5	20,6	30,2	38,8	47,4
Fan	W	30	103	233	469	872
Sound power (Lw)	dB(A)	47,5	62,0	70,0	74,5	78,0
Sound pressure (Lp) (1)	dB(A)	38,5	53,0	61,0	65,5	69,0

(1) The sound pressure levels are 9 dB(A) lower than the sound power levels, apply to the reverberant field of a 100 m^3 room and a reverberation time of 0.5 sec.

COOLING EMISSION

3 row coil units

Entering air temperature: 27 °C - R.H.: 50% - Available pressure: 0 Pa

			WT: 7 / 12 °C				WT: 8 / 13 °C				WT: 10 / 15 °C				WT: 12 / 17 °C			
		Qv	Pc	Ps	Qw	Dp(c)	Pc	Ps	Qw	Dp(c)	Pc	Ps	Qw	Dp(c)	Pc	Ps	Qw	Dp(c)
Model	Vdc	m^3/h	kW	kW	l/h	kPa	kW	kW	l/h	kPa	kW	kW	l/h	kPa	kW	kW	l/h	kPa
DFCL-ECM 13	10	1800	6,19	5,16	1064	16,7	5,49	5,03	944	13,8	4,46	4,46	768	9,1	3,52	3,52	605	5,9
	7,5	1580	5,95	4,81	1024	14,8	5,20	4,63	895	12,1	4,15	4,15	714	8,0	3,25	3,25	559	5,1
	5	1280	5,32	4,15	914	12,1	4,65	3,98	800	9,9	3,67	3,67	632	6,4	2,86	2,86	491	4,0
	3	950	4,40	3,35	757	9,0	3,93	3,24	676	7,3	3,08	3,04	530	4,6	2,36	2,34	406	2,8
	1	505	3,27	2,34	562	5,2	2,91	2,23	500	4,2	2,25	2,03	386	2,6	1,69	1,67	291	1,6
DFCL-ECM 23	10	2625	9,31	7,46	1602	31,9	8,14	7,20	1400	26,4	6,55	6,55	1127	17,7	5,18	5,18	892	11,5
	7,5	2030	7,93	6,14	1363	25,3	7,13	6,02	1226	20,7	5,68	5,68	977	13,6	4,45	4,45	765	8,7
	5	1375	6,42	4,72	1105	17,3	5,75	4,57	989	14,1	4,53	4,30	779	9,0	3,49	3,49	600	5,6
	3	970	5,24	3,74	901	11,9	4,69	3,58	806	9,7	3,65	3,31	627	6,1	2,77	2,75	477	3,7
	1	640	4,03	2,76	693	7,4	3,60	2,61	619	6,0	2,78	2,36	478	3,7	2,08	2,05	358	2,2
DFCL-ECM 33	10	3390	11,63	9,36	2000	36,2	10,51	9,25	1808	30,0	8,46	8,46	1456	20,1	6,71	6,71	1154	13,0
	7,5	2565	10,12	7,78	1741	28,1	9,11	7,63	1567	23,1	7,25	7,25	1247	15,2	5,69	5,69	978	9,7
	5	1750	8,24	6,02	1417	19,4	7,38	5,83	1269	15,8	5,81	5,48	999	10,2	4,48	4,48	771	6,3
	3	1190	6,57	4,65	1130	12,8	5,87	4,43	1010	10,4	4,57	4,09	787	6,6	3,48	3,44	598	4,0
	1	760	4,92	3,35	847	7,6	4,41	3,16	759	6,2	3,41	2,85	586	3,9	2,55	2,51	438	2,3
DFCL-ECM 43	10	3535	13,60	10,46	2339	32,7	12,25	10,28	2107	26,9	9,80	9,80	1685	17,8	7,69	7,69	1323	11,3
	7,5	2730	11,90	8,84	2046	25,5	10,67	8,59	1835	21,0	8,46	8,18	1455	13,6	6,57	6,57	1130	8,5
	5	1890	9,67	6,90	1664	17,6	8,67	6,62	1490	14,3	6,78	6,17	1166	9,1	5,19	5,19	893	5,6
	3	1275	7,60	5,26	1306	11,3	6,80	4,99	1169	9,2	5,27	4,55	907	5,8	3,98	3,93	684	3,4
	1	745	5,23	3,49	899	5,8	4,70	3,28	809	4,7	3,63	2,93	624	2,9	2,69	2,63	463	1,7
DFCL-ECM 53	10	5160	19,16	15,44	3295	37,3	17,24	15,14	2966	30,8	13,82	13,82	2377	20,4	10,87	10,87	1869	13,1
	7,5	4400	17,64	13,85	3034	32,3	15,87	13,53	2730	26,5	12,63	12,63	2172	17,3	9,88	9,88	1700	11,0
	5	3580	15,81	12,02	2719	26,4	14,19	11,68	2441	21,6	11,22	11,22	1930	14,0	8,70	8,70	1497	8,7
	3	2605	13,24	9,78	2277	19,2	11,84	9,42	2037	15,6	9,28	8,76	1596	9,9	7,10	7,09	1221	6,0
	1	1495	9,38	6,49	1614	10,2	8,37	6,15	1439	8,3	6,47	5,56	1114	5,2	4,86	4,80	835	3,0

WT: Water temperature
Vdc: Inverter power
Qv: Air flow
Pc: Cooling total emission
Ps: Cooling sensible emission
Qw: Water flow rate
Dp(c): Dp Cooling

Note: the power absorption (Watt) at p. 67 must be subtracted from the total and sensible cooling emission.

3 row coil units

Entering air temperature: 26 °C - R.H.: 50% - Available pressure: 0 Pa

			WT: 7 / 12 °C				WT: 8 / 13 °C				WT: 10 / 15 °C				WT: 12 / 17 °C			
		Qv	Pc	Ps	Qw	Dp(c)	Pc	Ps	Qw	Dp(c)	Pc	Ps	Qw	Dp(c)	Pc	Ps	Qw	Dp(c)
Model	Vdc	m³/h	kW	kW	l/h	kPa	kW	kW	l/h	kPa	kW	kW	l/h	kPa	kW	kW	l/h	kPa
DFCL-ECM 13	10	1800	5,53	5,04	951	13,8	4,98	4,98	857	11,2	3,97	3,97	683	7,4	3,45	3,45	593	5,7
	7,5	1580	5,18	4,61	891	12,2	4,64	4,52	798	9,9	3,68	3,68	633	6,4	3,18	3,18	547	4,9
	5	1280	4,62	3,97	795	9,9	4,13	3,87	710	8,0	3,25	3,25	559	5,1	2,68	2,68	461	3,6
	3	950	3,91	3,23	673	7,3	3,47	3,12	597	5,8	2,70	2,67	465	3,7	2,06	2,05	355	2,2
	1	505	2,89	2,23	498	4,2	2,56	2,13	440	3,3	1,96	1,93	337	2,0	1,47	1,45	252	1,2
DFCL-ECM 23	10	2625	8,10	7,16	1393	26,3	7,33	7,09	1260	21,7	5,84	5,84	1004	14,4	4,83	4,83	830	10,2
	7,5	2030	7,09	6,00	1220	20,7	6,35	5,87	1092	16,9	5,04	5,04	866	11,0	3,92	3,92	675	6,9
	5	1375	5,73	4,57	986	14,0	5,10	4,42	877	11,4	3,98	3,98	685	7,2	3,05	3,05	525	4,4
	3	970	4,66	3,58	801	9,6	4,13	3,43	711	7,7	3,19	3,15	548	4,8	2,41	2,39	414	2,9
	1	640	3,57	2,62	615	6,0	3,16	2,48	544	4,8	2,41	2,25	415	2,9	1,80	1,77	309	1,7
DFCL-ECM 33	10	3390	10,46	9,21	1799	29,9	9,40	9,08	1617	24,6	7,55	7,55	1298	16,3	6,10	6,10	1050	11,2
	7,5	2565	9,06	7,61	1559	23,1	8,12	7,45	1397	18,8	6,43	6,43	1106	12,2	5,01	5,01	861	7,7
	5	1750	7,34	5,82	1263	15,7	6,55	5,64	1126	12,7	5,11	5,11	879	8,1	3,93	3,93	675	4,9
	3	1190	5,85	4,44	1006	10,4	5,19	4,25	892	8,3	4,00	3,92	688	5,2	3,02	2,99	520	3,1
	1	760	4,39	3,17	754	6,2	3,88	3,00	667	4,9	2,95	2,71	508	3,0	2,19	2,16	378	1,7
DFCL-ECM 43	10	3535	12,20	10,25	2099	26,8	10,95	10,06	1883	21,9	8,70	8,70	1496	14,3	6,79	6,79	1168	9,1
	7,5	2730	10,61	8,57	1826	20,8	9,49	8,35	1632	16,9	7,47	7,47	1284	10,9	5,76	5,76	992	6,7
	5	1890	8,61	6,61	1481	14,2	7,67	6,38	1319	11,5	5,94	5,94	1022	7,2	4,52	4,52	778	4,3
	3	1275	6,76	4,99	1163	9,2	5,99	4,76	1030	7,3	4,59	4,35	790	4,5	3,45	3,41	593	2,6
	1	745	4,67	3,29	804	4,7	4,13	3,10	711	3,7	3,14	2,77	540	2,3	2,31	2,27	397	1,3
DFCL-ECM 53	10	5160	17,15	15,07	2950	30,7	15,44	14,79	2655	25,2	12,29	12,29	2114	16,5	10,08	10,08	1733	11,6
	7,5	4400	15,79	13,48	2716	26,3	14,16	13,17	2435	21,5	11,19	11,19	1925	13,9	8,71	8,71	1498	8,8
	5	3580	14,12	11,65	2428	21,5	12,60	11,30	2168	17,4	9,90	9,90	1703	11,2	7,63	7,63	1313	6,9
	3	2605	11,78	9,41	2026	15,5	10,48	9,06	1803	12,5	8,13	8,11	1399	7,8	6,19	6,20	1064	4,7
	1	1495	8,33	6,16	1432	8,2	7,36	5,84	1266	6,6	5,62	5,29	967	4,0	4,19	4,15	720	2,3

WT: Water temperature
Vdc: Inverter power
Qv: Air flow
Pc: Cooling total emission
Ps: Cooling sensible emission
Qw: Water flow rate
Dp(c): Dp Cooling

Note: the power absorption (Watt) at p. 67 must be subtracted from the total and sensible cooling emission.

3 row coil units

Entering air temperature: 25 °C - R.H.: 50% - Available pressure: 0 Pa

			WT: 7 / 12 °C				WT: 8 / 13 °C				WT: 10 / 15 °C				WT: 12 / 17 °C			
		Qv	Pc	Ps	Qw	Dp(c)	Pc	Ps	Qw	Dp(c)	Pc	Ps	Qw	Dp(c)	Pc	Ps	Qw	Dp(c)
Model	Vdc	m³/h	kW	kW	l/h	kPa	kW	kW	l/h	kPa	kW	kW	l/h	kPa	kW	kW	l/h	kPa
DFCL-ECM 13	10	1800	4,96	4,96	854	11,2	4,45	4,45	765	9,1	3,53	3,53	607	5,9	3,09	3,09	532	4,7
	7,5	1580	4,63	4,50	797	9,9	4,13	4,13	711	8,0	3,26	3,26	561	5,2	2,85	2,85	491	4,1
	5	1280	4,12	3,85	708	8,0	3,66	3,66	629	6,4	2,86	2,86	493	4,1	2,50	2,50	429	3,2
	3	950	3,46	3,11	595	5,8	3,06	3,01	527	4,7	2,37	2,35	407	2,9	2,05	2,04	353	2,2
	1	505	2,55	2,12	438	3,3	2,24	2,03	385	2,6	1,70	1,67	292	1,6	1,45	1,43	250	1,2
DFCL-ECM 23	10	2625	7,28	7,03	1252	21,7	6,53	6,53	1122	17,7	5,20	5,20	894	11,6	4,53	4,53	779	9,0
	7,5	2030	6,34	5,85	1090	16,9	5,66	5,66	973	13,7	4,46	4,46	767	8,8	3,86	3,86	664	6,8
	5	1375	5,09	4,41	875	11,3	4,51	4,27	776	9,1	3,50	3,50	602	5,7	2,99	2,99	515	4,3
	3	970	4,12	3,43	708	7,7	3,63	3,29	625	6,1	2,78	2,76	479	3,7	2,34	2,32	402	2,7
	1	640	3,15	2,48	542	4,7	2,77	2,36	476	3,7	2,09	2,06	359	2,2	1,58	1,56	272	1,3
DFCL-ECM 33	10	3390	9,39	9,04	1615	24,6	8,44	8,44	1451	20,1	6,72	6,72	1157	13,2	5,86	5,86	1007	10,3
	7,5	2565	8,10	7,42	1393	18,7	7,23	7,23	1244	15,3	5,70	5,70	981	9,8	4,93	4,93	848	7,5
	5	1750	6,53	5,62	1123	12,7	5,79	5,44	995	10,2	4,50	4,50	773	6,4	3,84	3,84	661	4,8
	3	1190	5,16	4,25	888	8,3	4,56	4,07	784	6,6	3,49	3,45	600	4,0	2,83	2,81	487	2,8
	1	760	3,86	3,00	664	4,9	3,39	2,85	583	3,9	2,56	2,52	440	2,3	1,89	1,86	325	1,3
DFCL-ECM 43	10	3535	10,91	10,01	1876	21,9	9,75	9,75	1678	17,8	7,71	7,71	1326	11,5	6,65	6,65	1144	8,8
	7,5	2730	9,46	8,32	1626	16,9	8,42	8,10	1447	13,6	6,58	6,58	1132	8,6	5,63	5,63	969	6,5
	5	1890	7,63	6,36	1312	11,5	6,75	6,13	1162	9,1	5,21	5,21	896	5,7	4,38	4,38	753	4,1
	3	1275	5,96	4,76	1026	7,3	5,25	4,54	903	5,8	3,99	3,94	687	3,5	3,02	2,99	520	2,1
	1	745	4,11	3,11	707	3,7	3,61	2,93	620	2,9	2,70	2,62	465	1,7	1,98	1,95	340	1,0
DFCL-ECM 53	10	5160	15,38	14,71	2645	25,1	13,77	13,77	2368	20,5	10,90	10,90	1875	13,3	9,58	9,58	1648	10,5
	7,5	4400	14,10	13,11	2426	21,4	12,58	12,58	2164	17,4	9,91	9,91	1704	11,2	8,67	8,67	1491	8,8
	5	3580	12,57	11,27	2162	17,4	11,17	10,93	1922	14,0	8,73	8,73	1501	8,9	7,60	7,60	1307	6,9
	3	2605	10,43	9,04	1795	12,4	9,24	8,70	1590	9,9	7,12	7,11	1224	6,1	6,14	6,15	1055	4,7
	1	1495	7,33	5,85	1261	6,6	6,44	5,55	1108	5,2	4,87	4,82	838	3,1	3,80	3,76	653	2,0

WT: Water temperature
Vdc: Inverter power
Qv: Air flow
Pc: Cooling total emission
Ps: Cooling sensible emission
Qw: Water flow rate
Dp(c): Dp Cooling

Note: the power absorption (Watt) at p. 67 must be subtracted from the total and sensible cooling emission.

4 and 6 row coil unit

Entering air temperature: 27 °C - R.H.: 50% - Available pressure: 0 Pa

			WT: 7 / 12 °C				WT: 8 / 13 °C				WT: 10 / 15 °C				WT: 12 / 17 °C			
		Qv	Pc	Ps	Qw	Dp(c)	Pc	Ps	Qw	Dp(c)	Pc	Ps	Qw	Dp(c)	Pc	Ps	Qw	Dp(c)
Model	Vdc	m³/h	kW	kW	l/h	kPa	kW	kW	l/h	kPa	kW	kW	l/h	kPa	kW	kW	l/h	kPa
DFCL-ECM 14	10	1750	7,28	5,77	1252	13,3	6,53	5,61	1124	10,9	5,15	5,15	886	7,0	3,99	3,99	687	4,4
	7,5	1520	6,75	5,23	1161	11,6	6,04	5,06	1038	9,4	4,75	4,75	817	6,0	3,66	3,66	629	3,7
	5	1190	5,89	4,40	1013	9,0	5,26	4,23	904	7,3	4,09	3,92	704	4,6	3,12	3,12	537	2,8
	3	870	4,87	3,53	838	6,4	4,34	3,37	746	5,2	3,35	3,08	577	3,2	2,53	2,50	435	1,9
	1	460	3,17	2,16	546	2,9	2,82	2,03	485	2,4	2,16	1,81	372	1,5	1,60	1,58	275	0,8
DFCL-ECM 24	10	2580	10,77	8,33	1853	26,1	9,66	8,11	1662	21,4	7,67	7,67	1320	13,9	5,98	5,98	1029	8,8
	7,5	1980	9,35	6,95	1607	20,2	8,37	6,72	1439	16,5	6,59	6,30	1133	10,6	5,07	5,07	872	6,5
	5	1345	7,50	5,31	1290	13,5	6,68	5,07	1150	11,0	5,20	4,66	895	6,9	3,95	3,95	679	4,1
	3	930	5,91	4,07	1017	8,8	5,28	3,86	908	7,1	4,07	3,48	701	4,4	3,05	3,02	525	2,6
	1	620	4,46	2,97	767	5,3	3,99	2,80	686	4,3	3,07	2,48	528	2,6	2,27	2,22	391	1,5
DFCL-ECM 34	10	3290	14,30	10,95	2460	34,0	12,85	10,65	2210	27,9	10,19	10,19	1752	18,1	7,92	7,92	1362	11,4
	7,5	2525	12,39	9,13	2132	26,2	11,10	8,81	1909	21,4	8,73	8,22	1502	13,7	6,71	6,71	1155	8,5
	5	1720	9,92	6,97	1707	17,5	8,87	6,66	1526	14,2	6,90	6,08	1186	9,0	5,23	5,23	900	5,4
	3	1170	7,73	5,27	1329	11,1	6,91	4,99	1188	9,0	5,34	4,48	918	5,6	4,00	3,95	687	3,3
	1	740	5,58	3,68	960	6,2	5,00	3,46	861	5,0	3,86	3,05	664	3,1	2,85	2,71	491	1,8
DFCL-ECM 44	10	3475	16,76	12,42	2883	28,2	15,04	12,01	2587	23,0	11,84	11,22	2036	14,8	9,11	9,11	1567	9,1
	7,5	2690	14,50	10,39	2494	21,6	12,98	9,97	2232	17,6	10,13	9,19	1743	11,2	7,73	7,73	1329	6,8
	5	1860	11,56	7,96	1989	14,3	10,33	7,56	1776	11,6	8,00	6,84	1376	7,3	6,02	6,02	1035	4,3
	3	1250	8,82	5,92	1516	8,8	7,89	5,58	1357	7,1	6,09	4,96	1047	4,4	4,52	4,45	778	2,6
	1	730	5,84	3,80	1005	4,2	5,26	3,57	905	3,4	4,06	3,12	699	2,1	2,99	2,75	514	1,2
DFCL-ECM 54	10	5095	23,58	18,16	4057	32,2	21,12	17,53	3633	26,2	16,67	16,67	2867	16,9	12,88	12,88	2215	10,5
	7,5	4355	21,63	16,25	3720	27,5	19,34	15,62	3327	22,4	15,18	14,49	2612	14,3	11,66	11,66	2006	8,8
	5	3550	19,24	14,05	3310	22,2	17,18	13,42	2955	18,1	13,41	12,32	2306	11,4	10,21	10,21	1757	6,9
	3	2580	15,83	11,25	2722	15,6	14,12	10,69	2429	12,7	10,96	9,67	1884	7,9	8,24	8,22	1417	4,7
	1	1480	10,80	7,25	1858	7,8	9,65	6,82	1659	6,3	7,43	6,03	1279	3,9	5,51	5,37	947	2,3
DFCL-ECM 64	10	5945	28,97	22,45	4983	41,7	25,96	21,60	4465	34,2	20,47	20,10	3521	22,0	15,75	15,75	2709	13,6
	7,5	4940	26,10	19,67	4489	34,6	23,37	18,85	4020	28,2	18,30	17,35	3147	18,0	14,00	14,00	2408	10,9
	5	3965	22,93	16,77	3944	27,4	20,49	15,97	3525	22,2	15,97	14,55	2747	14,0	12,10	12,10	2081	8,4
	3	2900	18,81	13,28	3236	19,1	16,80	12,56	2890	15,5	13,01	11,27	2238	9,7	9,75	9,75	1677	5,7
	1	1740	13,13	8,72	2258	9,9	11,75	8,19	2021	8,1	9,07	7,21	1560	5,0	6,70	6,40	1153	2,9
DFCL-ECM 66	10	5905	36,91	26,48	6349	62,2	33,07	25,13	5687	50,8	25,83	22,69	4442	32,2	19,57	19,57	3366	19,3
	7,5	4910	32,85	23,06	5650	50,3	29,41	21,79	5059	41,1	22,91	19,51	3941	26,0	17,25	17,25	2967	15,4
	5	3940	28,37	19,47	4880	38,5	25,42	18,34	4371	31,5	19,77	16,27	3400	19,9	14,77	14,54	2540	11,6
	3	2880	22,67	15,16	3899	25,7	20,36	14,23	3502	21,1	15,83	12,50	2723	13,3	11,74	11,02	2019	7,7
	1	1725	15,17	9,68	2610	12,4	13,70	9,06	2357	10,3	10,71	7,88	1842	6,5	7,89	6,84	1357	3,7

WT: Water temperature
Vdc: Inverter power
Qv: Air flow
Pc: Cooling total emission
Ps: Cooling sensible emission
Qw: Water flow rate
Dp(c): Dp Cooling

Note: the power absorption (Watt) at p. 67 must be subtracted from the total and sensible cooling emission.

4 and 6 row coil unit

Entering air temperature: 26 °C - R.H.: 50% - Available pressure: 0 Pa

			WT: 7 / 12 °C				WT: 8 / 13 °C				WT: 10 / 15 °C				WT: 12 / 17 °C			
		Qv	Pc	Ps	Qw	Dp(c)	Pc	Ps	Qw	Dp(c)	Pc	Ps	Qw	Dp(c)	Pc	Ps	Qw	Dp(c)
Model	Vdc	m³/h	kW	kW	l/h	kPa	kW	kW	l/h	kPa	kW	kW	l/h	kPa	kW	kW	l/h	kPa
DFCL-ECM 14	10	1750	6,49	5,59	1117	10,8	5,79	5,43	996	8,8	4,55	4,55	783	5,6	3,81	3,81	655	4,0
	7,5	1520	6,01	5,05	1034	9,4	5,35	4,89	920	7,6	4,17	4,17	718	4,8	3,35	3,35	576	3,2
	5	1190	5,23	4,23	899	7,3	4,63	4,06	796	5,8	3,58	3,58	616	3,6	2,72	2,72	468	2,2
	3	870	4,32	3,37	743	5,1	3,81	3,21	656	4,1	2,92	2,89	502	2,5	2,19	2,17	377	1,5
	1	460	2,80	2,04	482	2,4	2,47	1,92	425	1,9	1,87	1,71	321	1,1	1,37	1,35	236	0,6
DFCL-ECM 24	10	2580	9,63	8,09	1656	21,3	8,61	7,88	1481	17,3	6,79	6,79	1168	11,2	5,26	5,26	905	7,0
	7,5	1980	8,32	6,71	1432	16,4	7,42	6,49	1277	13,2	5,80	5,80	997	8,4	4,44	4,44	763	5,1
	5	1345	6,65	5,07	1144	10,9	5,90	4,85	1015	8,7	4,54	4,54	782	5,4	3,43	3,43	589	3,2
	3	930	5,25	3,86	902	7,1	4,64	3,66	798	5,6	3,54	3,31	609	3,4	2,63	2,60	453	2,0
	1	620	3,96	2,81	682	4,2	3,50	2,64	603	3,4	2,65	2,34	456	2,0	1,95	1,92	335	1,2
DFCL-ECM 34	10	3290	12,78	10,62	2199	27,8	11,42	10,31	1965	22,7	9,00	9,00	1548	14,5	6,96	6,96	1197	9,0
	7,5	2525	11,06	8,80	1902	21,3	9,86	8,50	1697	17,2	7,68	7,68	1321	10,9	5,87	5,87	1010	6,6
	5	1720	8,82	6,66	1518	14,1	7,82	6,35	1345	11,4	6,03	5,81	1037	7,0	4,54	4,54	781	4,2
	3	1170	6,86	5,00	1180	9,0	6,08	4,73	1045	7,2	4,63	4,25	797	4,4	3,44	3,40	591	2,5
	1	740	4,97	3,47	855	5,0	4,40	3,25	756	4,0	3,33	2,87	573	2,4	2,44	2,40	419	1,3
DFCL-ECM 44	10	3475	14,94	11,98	2570	22,9	13,34	11,57	2294	18,5	10,41	10,41	1790	11,7	7,97	7,97	1371	7,2
	7,5	2690	12,91	9,97	2220	17,5	11,47	9,55	1973	14,1	8,88	8,88	1527	8,8	6,72	6,72	1157	5,3
	5	1860	10,26	7,57	1765	11,6	9,09	7,19	1564	9,2	6,97	6,51	1199	5,7	5,20	5,20	895	3,3
	3	1250	7,84	5,59	1348	7,1	6,93	5,26	1192	5,6	5,27	4,69	906	3,4	3,88	3,83	668	1,9
	1	730	5,22	3,58	899	3,4	4,63	3,35	796	2,7	3,50	2,93	602	1,6	2,54	2,50	437	0,9
DFCL-ECM 54	10	5095	21,04	17,50	3620	26,2	18,77	16,89	3228	21,2	14,70	14,70	2529	13,5	11,29	11,29	1942	8,3
	7,5	4355	19,27	15,61	3314	22,3	17,14	15,00	2948	18,0	13,36	13,36	2298	11,3	10,18	10,18	1752	6,9
	5	3550	17,11	13,43	2943	18,0	15,20	12,84	2614	14,4	11,74	11,74	2019	9,0	8,88	8,88	1528	5,4
	3	2580	14,05	10,70	2417	12,6	12,45	10,16	2142	10,1	9,54	9,21	1641	6,2	7,12	7,12	1225	3,6
	1	1480	9,58	6,84	1648	6,3	8,48	6,42	1458	5,0	6,42	5,68	1105	3,0	4,71	4,66	810	1,7
DFCL-ECM 64	10	5945	25,86	21,59	4449	34,1	23,06	20,77	3966	27,5	17,99	17,99	3094	17,4	13,78	13,78	2371	10,6
	7,5	4940	23,25	18,83	3999	28,1	20,68	18,03	3557	22,6	16,05	16,05	2760	14,2	12,19	12,19	2097	8,5
	5	3965	20,37	15,97	3504	22,1	18,09	15,22	3111	17,8	13,93	13,87	2397	11,0	10,50	10,50	1806	6,5
	3	2900	16,70	12,58	2872	15,4	14,81	11,90	2547	12,3	11,32	10,69	1946	7,5	8,42	8,42	1447	4,4
	1	1740	11,66	8,21	2006	8,0	10,33	7,70	1776	6,4	7,83	6,78	1347	3,9	5,73	5,64	985	2,2
DFCL-ECM 66	10	5905	32,88	25,16	5656	50,6	29,23	23,86	5027	40,7	22,55	21,56	3879	25,3	16,95	16,95	2915	14,9
	7,5	4910	29,23	21,83	5028	40,9	25,99	20,63	4470	32,9	19,95	18,48	3432	20,2	14,87	14,87	2558	11,8
	5	3940	25,27	18,39	4346	31,3	22,45	17,30	3862	25,2	17,16	15,35	2951	15,4	12,69	12,69	2182	8,8
	3	2880	20,22	14,28	3478	20,9	17,99	13,38	3094	16,8	13,70	11,73	2357	10,2	10,03	10,03	1725	5,8
	1	1725	13,59	9,10	2337	10,2	12,13	8,49	2086	8,2	9,24	7,35	1590	5,0	6,69	6,40	1151	2,8

WT: Water temperature
Vdc: Inverter power
Qv: Air flow
Pc: Cooling total emission
Ps: Cooling sensible emission
Qw: Water flow rate
Dp(c): Dp Cooling

Note: the power absorption (Watt) at p. 67 must be subtracted from the total and sensible cooling emission.

4 and 6 row coil unit

Entering air temperature: 25 °C - R.H.: 50% - Available pressure: 0 Pa

			WT: 7 / 12 °C				WT: 8 / 13 °C				WT: 10 / 15 °C				WT: 12 / 17 °C			
		Qv	Pc	Ps	Qw	Dp(c)	Pc	Ps	Qw	Dp(c)	Pc	Ps	Qw	Dp(c)	Pc	Ps	Qw	Dp(c)
Model	Vdc	m³/h	kW	kW	l/h	kPa	kW	kW	l/h	kPa	kW	kW	l/h	kPa	kW	kW	l/h	kPa
DFCL-ECM 14	10	1750	5,78	5,41	994	8,7	5,14	5,14	884	7,0	4,01	4,01	690	4,4	3,52	3,52	606	3,5
	7,5	1520	5,33	4,87	917	7,6	4,73	4,73	813	6,0	3,67	3,67	631	3,8	3,21	3,21	553	3,0
	5	1190	4,61	4,05	794	5,8	4,08	3,90	702	4,6	3,14	3,14	539	2,8	2,19	2,17	376	1,5
	3	870	3,80	3,21	654	4,1	3,34	3,06	575	3,2	2,54	2,52	437	1,9	2,72	2,72	468	2,2
	1	460	2,46	1,92	423	1,9	2,15	1,81	371	1,5	1,61	1,58	276	0,8	1,27	1,26	219	0,6
DFCL-ECM 24	10	2580	8,58	7,84	1475	17,3	7,65	7,65	1315	14,0	6,00	6,00	1032	8,9	5,23	5,23	900	7,0
	7,5	1980	7,39	6,46	1271	13,2	6,56	6,25	1128	10,6	5,09	5,09	876	6,6	4,40	4,40	756	5,1
	5	1345	5,87	4,85	1010	8,7	5,19	4,64	892	6,9	3,96	3,96	682	4,2	3,36	3,36	579	3,1
	3	930	4,62	3,66	794	5,6	4,06	3,47	698	4,4	3,07	3,03	528	2,6	2,38	2,35	409	1,7
	1	620	3,48	2,64	599	3,4	3,05	2,48	525	2,6	2,28	2,21	393	1,5	1,66	1,64	286	0,9
DFCL-ECM 34	10	3290	11,39	10,28	1959	22,6	10,15	10,15	1746	18,2	7,95	7,95	1367	11,6	6,94	6,94	1194	9,1
	7,5	2525	9,81	8,47	1688	17,2	8,70	8,16	1497	13,8	6,74	6,74	1159	8,6	5,83	5,83	1003	6,6
	5	1720	7,79	6,35	1340	11,3	6,87	6,06	1181	9,0	5,25	5,25	902	5,5	4,30	4,30	740	3,8
	3	1170	6,05	4,73	1041	7,2	5,32	4,48	915	5,6	4,01	3,96	689	3,4	2,98	2,95	513	2,0
	1	740	4,38	3,26	753	4,0	3,84	3,06	660	3,1	2,86	2,70	492	1,8	2,08	2,05	358	1,0
DFCL-ECM 44	10	3475	13,29	11,54	2285	18,5	11,79	11,13	2027	14,8	9,14	9,14	1572	9,3	7,92	7,92	1362	7,2
	7,5	2690	11,42	9,53	1964	14,0	10,10	9,14	1737	11,2	7,76	7,76	1334	6,9	6,64	6,64	1143	5,2
	5	1860	9,05	7,19	1557	9,2	7,97	6,83	1371	7,3	6,04	6,04	1040	4,4	4,71	4,71	810	2,8
	3	1250	6,90	5,27	1187	5,6	6,06	4,97	1042	4,4	4,54	4,43	781	2,6	3,32	3,29	572	1,5
	1	730	4,60	3,36	792	2,7	4,04	3,14	695	2,1	3,00	2,74	516	1,2	2,16	2,13	372	0,7
DFCL-ECM 54	10	5095	18,69	16,84	3215	21,2	16,63	16,27	2860	17,1	12,93	12,93	2224	10,7	11,44	11,44	1968	8,6
	7,5	4355	17,10	14,97	2940	18,0	15,13	14,39	2603	14,4	11,71	11,71	2014	8,9	10,31	10,31	1774	7,1
	5	3550	15,13	12,82	2603	14,4	13,37	12,26	2300	11,5	10,25	10,25	1764	7,0	8,95	8,95	1540	5,5
	3	2580	12,40	10,16	2133	10,0	10,91	9,65	1876	7,9	8,27	8,25	1423	4,8	6,87	6,88	1182	3,4
	1	1480	8,44	6,43	1451	5,0	7,40	6,04	1273	3,9	5,53	5,35	951	2,3	4,04	4,00	695	1,3
DFCL-ECM 64	10	5945	22,98	20,72	3952	27,5	20,40	19,94	3509	22,0	15,81	15,81	2719	13,8	13,99	13,99	2406	11,0
	7,5	4940	20,61	18,00	3545	22,6	18,24	17,24	3137	18,0	14,05	14,05	2417	11,1	12,35	12,35	2124	8,8
	5	3965	18,03	15,21	3102	17,7	15,90	14,49	2735	14,1	12,15	12,15	2090	8,6	10,46	10,46	1798	6,5
	3	2900	14,73	11,90	2534	12,3	12,96	11,25	2229	9,7	9,79	9,79	1684	5,8	7,77	7,77	1336	3,8
	1	1740	10,29	7,72	1769	6,4	9,02	7,23	1552	5,0	6,73	6,38	1158	2,9	4,89	4,82	842	1,6
DFCL-ECM 66	10	5905	29,14	23,87	5012	40,6	25,74	22,64	4427	32,3	19,65	19,65	3380	19,6	15,27	15,27	2627	12,4
	7,5	4910	25,90	20,66	4454	32,8	22,83	19,51	3927	26,0	17,32	17,32	2979	15,6	12,82	12,82	2205	9,0
	5	3940	22,32	17,32	3840	25,1	19,67	16,29	3383	19,9	14,83	14,48	2551	11,8	10,90	10,90	1874	6,7
	3	2880	17,89	13,41	3077	16,8	15,75	12,54	2709	13,2	11,79	11,01	2028	7,8	8,56	8,56	1473	4,3
	1	1725	12,05	8,52	2073	8,2	10,62	7,92	1827	6,5	7,92	6,85	1362	3,8	5,66	5,58	974	2,1

WT: Water temperature
Vdc: Inverter power
Qv: Air flow
Pc: Cooling total emission
Ps: Cooling sensible emission
Qw: Water flow rate
Dp(c): Dp Cooling

Note: the power absorption (Watt) at p. 67 must be subtracted from the total and sensible cooling emission.

HEATING EMISSION

3 row coil units

Entering air temperature: 20 °C - Available pressure: 0 Pa

			WT: 70 / 60 °C			WT: 60 / 50 °C			WT: 55 / 45 °C			WT: 50 / 40 °C			WT: 50 / 45 °C			WT: 45 / 40 °C		
		Qv	Ph	Qw	Dp(h)	Ph	Qw	Dp(h)	Ph	Qw	Dp(h)	Ph	Qw	Dp(h)	Ph	Qw	Dp(h)	Ph	Qw	Dp(h)
Model	Vdc	m^3/h	kW	l/h	kPa	kW	l/h	kPa	kW	l/h	kPa	kW	l/h	kPa	kW	l/h	kPa	kW	l/h	kPa
DFCL-ECM 13	10	1800	15,53	1336	17,4	11,81	1016	11,0	9,96	857	8,3	8,10	696	5,8	9,47	1629	26,4	7,63	1313	18,3
	7,5	1580	14,25	1225	14,9	10,86	934	9,4	9,16	787	7,1	7,45	641	5,0	8,68	1493	22,6	7,01	1206	15,7
	5	1280	12,35	1062	11,5	9,43	811	7,3	7,96	685	5,5	6,49	558	3,9	7,52	1294	17,4	6,08	1046	12,1
	3	950	10,01	861	7,8	7,66	658	5,0	6,48	557	3,8	5,30	456	2,7	6,09	1047	11,9	4,93	849	8,3
	1	505	6,92	595	4,0	5,33	458	2,6	4,52	389	2,0	3,72	320	1,4	4,21	723	6,1	3,42	588	4,3
DFCL-ECM 23	10	2625	22,12	1902	31,8	16,92	1455	20,3	14,31	1230	15,3	11,68	1005	10,8	13,49	2320	48,3	10,92	1878	33,6
	7,5	2030	18,69	1607	23,4	14,31	1231	15,0	12,12	1043	11,4	9,93	854	8,1	11,38	1958	35,6	9,23	1587	24,8
	5	1375	14,26	1226	14,4	10,96	943	9,3	9,30	800	7,0	7,65	658	5,0	8,68	1492	21,7	7,05	1213	15,2
	3	970	11,05	950	9,0	8,52	733	5,9	7,25	623	4,5	5,97	513	3,2	6,71	1155	13,7	5,46	940	9,6
	1	640	8,02	690	5,1	6,21	534	3,3	5,30	455	2,5	4,38	377	1,8	4,87	837	7,6	3,97	683	5,4
DFCL-ECM 33	10	3390	28,09	2416	34,9	21,49	1848	22,3	18,20	1565	16,8	14,88	1280	11,9	17,14	2948	53,0	13,88	2387	36,9
	7,5	2565	23,42	2014	25,1	17,96	1545	16,1	15,23	1310	12,2	12,47	1073	8,7	14,27	2454	38,1	11,57	1991	26,6
	5	1750	17,97	1546	15,6	13,83	1189	10,0	11,76	1011	7,6	9,66	831	5,5	10,94	1882	23,6	8,89	1529	16,5
	3	1190	13,56	1166	9,3	10,47	900	6,1	8,91	766	4,6	7,35	632	3,3	8,25	1419	14,1	6,71	1154	9,9
	1	760	9,59	825	5,0	7,43	639	3,3	6,35	546	2,5	5,26	452	1,8	5,82	1001	7,5	4,75	817	5,3
DFCL-ECM 43	10	3535	34,28	2948	26,3	26,26	2259	16,9	22,25	1913	12,8	18,24	1568	9,1	20,88	3591	39,9	16,91	2908	27,8
	7,5	2730	28,67	2465	19,1	22,04	1895	12,3	18,69	1607	9,3	15,35	1320	6,6	17,46	3002	28,9	14,15	2435	20,2
	5	1890	21,92	1885	11,7	16,91	1454	7,6	14,38	1237	5,8	11,84	1018	4,2	13,33	2293	17,7	10,84	1864	12,4
	3	1275	16,19	1393	6,8	12,53	1077	4,4	10,69	919	3,4	8,84	760	2,4	9,82	1689	10,2	8,01	1378	7,2
	1	745	10,43	897	3,0	8,12	698	2,0	6,96	598	1,5	5,78	497	1,1	6,32	1087	4,6	5,17	890	3,2
DFCL-ECM 53	10	5160	48,77	4194	43,4	37,35	3212	27,8	31,62	2719	21,0	25,88	2226	14,9	29,72	5111	65,7	24,04	4136	45,9
	7,5	4400	43,82	3769	35,7	33,61	2891	22,9	28,50	2451	17,3	23,35	2008	12,4	26,68	4589	54,1	21,62	3719	37,8
	5	3580	38,00	3268	27,6	29,21	2512	17,8	24,79	2132	13,5	20,35	1750	9,6	23,12	3977	41,7	18,77	3228	29,2
	3	2605	30,18	2595	18,2	23,25	2000	11,8	19,79	1702	9,0	16,28	1400	6,4	18,34	3154	27,5	14,92	2566	19,3
	1	1495	19,61	1687	8,3	15,20	1307	5,4	12,98	1116	4,2	10,74	924	3,0	11,89	2045	12,5	9,71	1671	8,8

WT: Water temperature
Vdc: Inverter power
Qv: Air flow
Ph: Heating emission
Qw: Water flow rate
Dp(h): Dp Heating

4 and 6 row coil unit

Entering air temperature: 20 °C - Available pressure: 0 Pa

			WT: 70 / 60 °C			WT: 60 / 50 °C			WT: 55 / 45 °C			WT: 50 / 40 °C			WT: 50 / 45 °C			WT: 45 / 40 °C		
		Qv	Ph	Qw	Dp(h)	Ph	Qw	Dp(h)	Ph	Qw	Dp(h)	Ph	Qw	Dp(h)	Ph	Qw	Dp(h)	Ph	Qw	Dp(h)
Model	Vdc	m³/h	kW	l/h	kPa	kW	l/h	kPa	kW	l/h	kPa	kW	l/h	kPa	kW	l/h	kPa	kW	l/h	kPa
DFCL-ECM 14	10	1750	19,48	1675	15,4	14,91	1282	9,9	12,61	1085	7,4	10,30	886	5,3	11,85	2039	23,3	9,59	1650	16,2
	7,5	1520	17,58	1512	12,8	13,49	1160	8,2	11,42	982	6,2	9,34	803	4,4	10,70	1840	19,3	8,67	1491	13,5
	5	1190	14,64	1259	9,2	11,25	968	5,9	9,55	822	4,5	7,84	674	3,2	8,89	1529	13,8	7,22	1242	9,7
	3	870	11,45	985	5,9	8,83	760	3,8	7,51	646	2,9	6,19	533	2,1	6,95	1195	8,8	5,65	972	6,2
	1	460	6,72	578	2,2	5,23	449	1,5	4,47	385	1,1	3,71	319	0,8	4,06	699	3,3	3,33	572	2,4
DFCL-ECM 24	10	2580	28,15	2421	28,9	21,62	1860	18,6	18,34	1577	14,1	15,06	1295	10,1	17,12	2944	43,8	13,90	2390	30,6
	7,5	1980	23,26	2000	20,4	17,91	1540	13,3	15,24	1310	10,1	12,53	1078	7,2	14,13	2431	30,9	11,48	1975	21,7
	5	1345	17,30	1488	12,0	13,38	1151	7,8	11,42	982	6,0	9,43	811	4,3	10,50	1806	18,0	8,56	1473	12,7
	3	930	12,83	1104	7,0	9,97	858	4,6	8,53	733	3,5	7,08	609	2,6	7,78	1338	10,4	6,36	1094	7,4
	1	620	9,10	783	3,7	7,10	611	2,5	6,10	524	1,9	5,08	437	1,4	5,50	946	5,6	4,51	776	4,0
DFCL-ECM 34	10	3290	33,12	2848	30,4	25,44	2187	19,6	21,60	1857	14,8	17,73	1525	10,6	20,16	3468	46,1	16,36	2813	32,2
	7,5	2525	27,49	2364	21,7	21,18	1821	14,1	18,01	1549	10,7	14,82	1274	7,7	16,72	2875	32,8	13,59	2337	23,1
	5	1720	20,69	1779	12,9	15,98	1375	8,4	13,63	1172	6,4	11,25	968	4,7	12,56	2161	19,5	10,23	1760	13,8
	3	1170	15,28	1314	7,5	11,86	1020	4,9	10,14	872	3,8	8,41	723	2,7	9,27	1595	11,3	7,57	1303	8,0
	1	740	10,47	900	3,8	8,16	702	2,5	7,00	602	1,9	5,83	501	1,4	6,34	1090	5,6	5,19	893	4,0
DFCL-ECM 44	10	3475	39,94	3435	26,5	30,79	2648	17,2	26,18	2252	13,1	21,59	1856	9,4	24,27	4175	39,9	19,76	3398	28,1
	7,5	2690	32,99	2837	18,7	25,49	2192	12,2	21,73	1869	9,3	17,95	1544	6,7	20,03	3446	28,2	16,33	2809	19,9
	5	1860	24,69	2123	11,1	19,17	1648	7,3	16,39	1409	5,6	13,57	1167	4,1	14,98	2576	16,6	12,24	2105	11,8
	3	1250	17,77	1528	6,1	13,85	1191	4,0	11,87	1021	3,1	9,88	850	2,3	10,76	1850	9,1	8,81	1516	6,5
	1	730	11,12	956	2,6	8,72	750	1,7	7,51	646	1,4	6,29	541	1,0	6,72	1155	3,9	5,53	951	2,8
DFCL-ECM 54	10	5095	-	-	-	43,80	3767	21,9	37,19	3198	16,6	30,55	2627	11,9	34,63	5957	51,3	28,13	4838	35,9
	7,5	4355	-	-	-	39,16	3368	17,9	33,29	2863	13,6	27,40	2356	9,8	30,91	5317	41,7	25,12	4320	29,2
	5	3550	-	-	-	33,69	2897	13,6	28,70	2469	10,4	23,66	2035	7,5	26,51	4559	31,6	21,58	3712	22,2
	3	2580	-	-	-	26,36	2267	8,7	22,51	1935	6,7	18,62	1601	4,8	20,64	3550	20,0	16,85	2898	14,2
	1	1480	-	-	-	16,73	1438	3,8	14,34	1233	3,0	11,94	1027	2,2	12,97	2232	8,6	10,64	1829	6,2
DFCL-ECM 64	10	5945	66,33	5704	37,0	51,03	4389	24,0	43,36	3729	18,0	35,70	3070	13,0	40,32	6936	56,0	32,77	5637	39,0
	7,5	4940	57,95	4984	29,0	44,71	3845	19,0	38,07	3274	14,0	31,37	2698	10,0	35,21	6056	44,0	28,65	4928	31,0
	5	3965	49,12	4224	22,0	37,99	3267	14,0	32,38	2785	11,0	26,74	2299	8,0	29,82	5129	33,0	24,31	4182	23,0
	3	2900	38,42	3304	14,0	29,81	2563	9,0	25,48	2191	7,0	21,10	1814	5,0	23,30	4007	21,0	19,03	3274	15,0
	1	1740	25,12	2161	6,0	19,61	1686	4,0	16,82	1446	3,0	14,01	1205	2,0	15,20	2615	10,0	12,47	2145	7,0
DFCL-ECM 66	10	5905	76,25	6558	46,0	59,22	5093	31,0	50,66	4357	24,0	46,24	7954	70,0	42,09	3620	17,0	37,81	6503	50,0
	7,5	4910	65,94	5671	36,0	51,33	4415	24,0	43,99	3783	18,0	39,97	6876	54,0	36,59	3147	13,0	32,73	5629	38,0
	5	3940	55,14	4742	26,0	43,03	3700	17,0	36,93	3176	13,0	33,40	5744	39,0	30,80	2649	10,0	27,39	4712	28,0
	3	2880	42,32	3639	16,0	33,13	2850	11,0	28,51	2452	8,0	25,59	4401	24,0	23,84	2051	6,0	21,04	3619	17,0
	1	1725	26,86	2310	7,0	21,15	1819	5,0	18,27	1571	4,0	16,21	2788	10,0	15,36	1321	3,0	13,37	2300	8,0

WT: Water temperature
Vdc: Inverter power
Qv: Air flow
Ph: Heating emission
Qw: Water flow rate
Dp(h): Dp Heating

1 row additional coil units

For 3 or 4 row versions (3+1 or 4+1 rows)

Entering air temperature: 20 °C - Available pressure: 0 Pa

			WT: 80 / 70 °C			WT: 75 / 65 °C			WT: 70 / 60 °C			WT: 65 / 55 °C			WT: 60 / 50 °C			WT: 55 / 45 °C		
		Qv	Ph	Qw	Dp(h)	Ph	Qw	Dp(h)	Ph	Qw	Dp(h)	Ph	Qw	Dp(h)	Ph	Qw	Dp(h)	Ph	Qw	Dp(h)
Model	Vdc	m³/h	kW	l/h	kPa	kW	l/h	kPa	kW	l/h	kPa	kW	l/h	kPa	kW	l/h	kPa	kW	l/h	kPa
DFCL-ECM 1	10	1750	7,82	673	39,4	7,06	607	33,2	6,29	541	27,4	5,52	475	22,1	4,75	409	17,1	3,99	343	12,7
	7,5	1520	7,26	625	34,4	6,56	564	29,0	5,84	502	24,0	5,13	441	19,3	4,42	380	15,0	3,71	319	11,1
	5	1190	6,36	547	27,1	5,75	494	22,9	5,13	441	19,0	4,50	387	15,3	3,88	333	11,9	3,25	280	8,8
	3	870	5,32	457	19,6	4,80	413	16,5	4,28	368	13,7	3,76	324	11,1	3,25	279	8,6	2,73	235	6,4
	1	460	3,53	303	9,3	3,19	274	7,9	2,85	245	6,6	2,51	216	5,3	2,17	186	4,2	1,83	157	3,1
DFCL-ECM 2	10	2580	10,74	924	66,7	9,71	835	56,3	8,66	744	46,6	7,61	654	37,5	6,56	564	29,3	5,51	474	21,8
	7,5	1980	9,41	810	52,4	8,51	731	44,4	7,59	652	36,7	6,67	573	29,7	5,76	495	23,1	4,84	416	17,2
	5	1345	7,65	658	36,2	6,91	594	30,6	6,17	530	25,4	5,43	467	20,5	4,69	403	16,0	3,95	339	12,0
	3	930	6,12	527	24,2	5,53	476	20,5	4,94	425	17,0	4,35	374	13,8	3,77	324	10,8	3,17	273	8,1
	1	620	4,72	406	15,1	4,27	367	12,8	3,81	328	10,7	3,36	289	8,6	2,91	251	6,8	2,46	212	5,1
DFCL-ECM 3	10	3290	13,47	1159	42,0	12,14	1044	35,3	10,82	931	29,2	9,50	817	23,4	8,16	702	18,2	6,84	588	13,5
	7,5	2525	11,78	1013	33,0	10,63	914	27,8	9,47	814	23,0	8,31	715	18,5	7,16	616	14,4	6,00	516	10,6
	5	1720	9,60	826	22,8	8,66	745	19,3	7,72	664	15,9	6,78	583	12,9	5,85	503	10,0	4,91	422	7,4
	3	1170	7,61	655	15,0	6,87	591	12,7	6,13	527	10,5	5,40	464	8,5	4,65	400	6,6	3,92	337	4,9
	1	740	5,67	487	8,8	5,12	440	7,5	4,58	394	6,2	4,03	347	5,0	3,48	299	3,9	2,93	252	2,9
DFCL-ECM 4	10	3475	16,22	1395	65,9	14,64	1259	55,8	13,09	1125	46,2	11,52	991	37,4	9,94	855	29,2	8,38	721	21,8
	7,5	2690	14,17	1218	51,8	12,82	1102	43,8	11,44	984	36,3	10,07	866	29,4	8,70	749	23,0	7,34	631	17,2
	5	1860	11,50	989	35,5	10,41	895	30,1	9,29	799	25,0	8,20	705	20,2	7,09	610	15,8	5,98	514	11,9
	3	1250	8,95	769	22,6	8,10	697	19,1	7,24	623	15,9	6,39	549	12,9	5,53	476	10,1	4,67	402	7,6
	1	730	6,28	540	11,9	5,69	489	10,1	5,09	438	8,4	4,50	387	6,8	3,90	335	5,4	3,30	284	4,1
DFCL-ECM 5	10	5095	22,35	1922	68,0	20,17	1734	57,5	18,00	1548	47,7	15,85	1363	38,5	13,69	1177	30,1	11,53	992	22,5
	7,5	4355	20,56	1768	58,7	18,57	1597	49,7	16,60	1428	41,2	14,62	1258	33,3	12,63	1086	26,0	10,63	914	19,5
	5	3550	18,46	1588	48,3	16,67	1434	40,8	14,89	1281	33,9	13,12	1128	27,4	11,34	975	21,5	9,55	822	16,0
	3	2580	15,44	1328	35,0	13,95	1200	29,6	12,47	1073	24,6	11,00	946	20,0	9,51	818	15,6	8,03	690	11,7
	1	1480	10,81	930	18,4	9,78	841	15,6	8,74	752	13,0	7,72	664	10,5	6,69	575	8,3	5,65	486	6,2

WT: Water temperature
Vdc: Inverter power
Qv: Air flow
Ph: Heating emission
Qw: Water flow rate
Dp(h): Dp Heating

DFCL-ECM 1÷5 unit with 2 row additional coil units

For 3 or 4 row version (3+2 or 4+2 rows)

Entering air temperature: 20 °C - Available pressure: 0 Pa

			WT: 65 / 55 °C			WT: 60 / 50 °C			WT: 55 / 45 °C			WT: 50 / 40 °C			WT: 50 / 45 °C			WT: 45 / 40 °C		
		Qv	Ph	Qw	Dp(h)	Ph	Qw	Dp(h)	Ph	Qw	Dp(h)	Ph	Qw	Dp(h)	Ph	Qw	Dp(h)	Ph	Qw	Dp(h)
Model	Vdc	m^3/h	kW	l/h	kPa	kW	l/h	kPa	kW	l/h	kPa	kW	l/h	kPa	kW	l/h	kPa	kW	l/h	kPa
DFCL-ECM 1	10	1650	12,26	1054	19,6	10,59	911	15,3	8,91	766	11,4	7,23	622	8,0	6,84	1177	25,4	5,54	476	5,0
	7,5	1405	11,07	952	16,3	9,57	823	12,8	8,05	693	9,5	6,54	563	6,7	6,18	1063	21,1	5,03	432	4,2
	5	1055	9,16	788	11,6	7,94	682	9,1	6,69	576	6,8	5,45	469	4,8	5,12	880	15,0	4,21	362	3,1
	3	740	7,16	616	7,4	6,21	534	5,8	5,25	452	4,4	4,29	369	3,1	3,99	686	9,6	3,33	286	2,0
	1	400	4,49	387	3,2	3,91	336	2,5	3,33	286	1,9	2,74	235	1,4	2,51	431	4,1	2,14	184	0,9
DFCL-ECM 2	10	2485	17,83	1534	45,5	15,43	1327	35,7	13,04	1122	26,8	10,63	914	18,9	9,97	1715	59,2	8,22	707	12,1
	7,5	1895	15,03	1292	33,4	13,03	1121	26,3	11,02	948	19,8	9,01	775	14,0	8,40	1445	43,4	6,98	600	9,0
	5	1285	11,61	999	20,9	10,09	867	16,5	8,55	736	12,5	7,01	603	8,9	6,49	1116	27,2	5,46	470	5,8
	3	865	8,75	752	12,5	7,62	655	9,9	6,48	557	7,6	5,33	458	5,4	4,89	841	16,3	4,17	359	3,6
	1	570	6,37	548	7,0	5,56	478	5,6	4,74	408	4,3	3,92	337	3,1	3,56	612	9,1	3,08	265	2,1
DFCL-ECM 3	10	3120	22,02	1894	25,4	19,00	1634	19,9	16,02	1378	14,9	12,99	1117	10,4	12,30	2115	33,1	9,97	857	6,6
	7,5	2441	18,89	1624	19,3	16,34	1405	15,1	13,77	1184	11,3	11,20	963	7,9	10,55	1815	25,0	8,62	741	5,1
	5	1645	14,57	1253	12,0	12,62	1085	9,5	10,67	918	7,1	8,71	749	5,0	8,13	1399	15,6	6,74	580	3,2
	3	1125	11,13	957	7,4	9,66	831	5,8	8,19	705	4,4	6,71	577	3,1	6,21	1068	9,6	5,22	449	2,0
	1	690	7,69	662	3,8	6,69	576	3,0	5,70	490	2,3	4,69	404	1,6	4,29	738	4,9	3,68	316	1,1
DFCL-ECM 4	10	3355	26,11	2245	44,1	22,66	1949	34,7	19,19	1650	26,2	15,69	1349	18,6	14,60	2511	57,4	12,19	1049	12,0
	7,5	2612	22,18	1907	32,8	19,27	1657	25,9	16,35	1406	19,6	13,40	1152	14,0	12,41	2134	42,6	10,44	897	9,1
	5	1800	17,20	1479	20,6	14,96	1286	16,3	12,71	1093	12,4	10,45	899	8,9	9,60	1651	26,8	8,18	704	5,8
	3	1200	12,75	1096	12,0	11,11	956	9,5	9,47	814	7,3	7,82	673	5,3	7,12	1224	15,6	6,15	529	3,5
	1	700	8,35	718	5,6	7,30	628	4,4	6,25	537	3,4	5,18	446	2,5	4,66	801	7,2	4,11	353	1,7
DFCL-ECM 5	10	4970	35,93	3090	44,4	31,12	2676	34,8	26,29	2261	26,2	21,43	1843	18,5	20,08	3454	57,7	16,68	1434	12,0
	7,5	4260	32,65	2808	37,3	28,29	2433	29,3	23,93	2058	22,1	19,54	1681	15,6	18,24	3138	48,5	14,80	1273	9,7
	5	3485	28,66	2465	29,5	24,89	2140	23,2	21,05	1811	17,5	17,22	1481	12,4	16,02	2756	38,4	11,81	1016	6,4
	3	2525	23,10	1987	19,9	20,05	1724	15,7	17,02	1464	11,9	13,97	1201	8,5	12,91	2220	25,9	9,08	781	4,0
	1	1450	15,42	1326	9,6	13,43	1155	7,6	11,44	984	5,8	9,44	811	4,2	8,60	1479	12,4	6,25	537	2,0

WT: Water temperature
Vdc: Inverter power
Qv: Air flow
Ph: Heating emission
Qw: Water flow rate
Dp(h): Dp Heating

DFCL-ECM 6 unit with 2 row additional coil units

Entering air temperature: 20 °C - Available pressure: 0 Pa

			WT: 65 / 55 °C			WT: 60 / 50 °C			WT: 55 / 45 °C			WT: 50 / 40 °C			WT: 50 / 45 °C			WT: 45 / 40 °C			WT: 45 / 35 °C		
		Qv	Ph	Qw	Dp(h)	Ph	Qw	Dp(h)	Ph	Qw	Dp(h)	Ph	Qw	Dp(h)	Ph	Qw	Dp(h)	Ph	Qw	Dp(h)	Ph	Qw	Dp(h)
Model	Vdc	m³/h	kW	l/h	kPa	kW	l/h	kPa	kW	l/h	kPa	kW	l/h	kPa	kW	l/h	kPa	kW	l/h	kPa	kW	l/h	kPa
DFCL-ECM 64+2	10	5885	37,50	3225	48,0	32,48	2793	37,6	27,44	2360	28,0	22,42	1928	20,0	25,95	4464	90,0	20,98	3608	62,0	17,36	1493	13,0
	7,5	4895	33,50	2881	39,0	29,04	2498	30,8	24,57	2113	23,0	20,09	1728	16,0	23,15	3983	73,0	18,75	3226	51,0	15,58	1340	11,0
	5	3925	29,12	2505	30,0	25,27	2173	23,9	21,41	1842	18,0	17,52	1507	13,0	20,11	3459	57,0	16,29	2802	40,0	13,62	1171	8,0
	3	2870	23,65	2034	21,0	20,55	1767	16,4	17,44	1500	12,0	14,31	1231	9,0	16,30	2804	39,0	13,23	2276	27,0	11,16	960	6,0
	1	1700	16,34	1405	11,0	14,21	1222	8,4	12,11	1041	6,0	9,97	858	5,0	11,21	1929	20,0	9,13	1570	14,0	7,82	673	3,0
DFCL-ECM 66+2	10	5840	37,34	3211	47,0	32,35	2782	37,0	27,33	2351	28,0	22,31	1918	20,0	25,81	4440	89,0	20,89	3593	62,0	17,27	1485	13,0
	7,5	4865	33,37	2870	39,0	28,93	2488	31,0	24,47	2105	23,0	20,02	1722	16,0	23,08	3971	73,0	18,68	3213	51,0	15,53	1335	11,0
	5	3900	29,03	2496	30,0	25,19	2166	24,0	21,32	1834	18,0	17,45	1501	13,0	20,04	3447	56,0	16,22	2790	39,0	13,57	1167	8,0
	3	2845	23,53	2023	21,0	20,43	1757	16,0	17,33	1491	12,0	14,23	1224	9,0	16,22	2789	38,0	13,14	2260	27,0	11,09	953	6,0
	1	1685	16,22	1395	11,0	14,13	1215	8,0	12,02	1034	6,0	9,90	852	5,0	11,15	1917	19,0	9,07	1560	14,0	7,77	668	3,0

WT: Water temperature
Vdc: Inverter power
Qv: Air flow
Ph: Heating emission
Qw: Water flow rate
Dp(h): Dp Heating

CORRECTION FACTOR TABLES

Air flow depending on speed and requested available pressure with 4 row coil

Air flow m^3/h

		Available pressure (Pa)												
Mod.	Vdc	0	10	20	30	40	50	60	70	80	90	100	110	120
DFCL-ECM 14	10	1750	1720	1680	1640	1600	1555	1005	1455	1400	1340	1270	1200	1120
	9,5	1705	1675	1640	1595	1550	1500	1450	1390	1325	1260	1180	1100	1020
	9	1665	1630	1590	1545	1500	1440	1380	1320	1240	1160	1080	990	900
	8,5	1615	1575	1535	1485	1435	1370	1300	1220	1140	1045	950	860	770
	8	1560	1520	1475	1420	1360	1285	1200	1105	1010	910	815	720	625
	7,5	1520	1470	1410	1345	1275	1190	1100	1000	900	790	690	585	485
	7	1460	1400	1335	1260	1180	1090	985	880	760	650	540	430	-
	6,5	1405	1330	1260	1175	1080	980	860	740	620	500	-	-	-
	6	1330	1250	1165	1070	965	850	720	600	460	-	-	-	-
	5,5	1265	1180	1080	975	855	720	580	435	-	-	-	-	-
	5	1190	1090	980	860	720	560	400	-	-	-	-	-	-
	4,5	1020	1010	882	740	580	410	-	-	-	-	-	-	-
	4	1040	920	770	610	440	265	-	-	-	-	-	-	-
	3	870	700	505	300	-	-	-	-	-	-	-	-	-
	2	650	445	160	-	-	-	-	-	-	-	-	-	-
	1	460	-	-	-	-	-	-	-	-	-	-	-	-
DFCL-ECM 24	10	2580	2555	2525	2500	2470	2440	2410	2370	2330	2280	2240	2180	2120
	9,5	2460	2440	2410	2380	2350	2320	2280	2245	2205	2160	2115	2060	1995
	9	2360	2340	2310	2280	2255	2220	2185	2150	2105	2060	2010	1950	1880
	8,5	2225	2200	2165	2140	2100	2065	2030	1990	1940	1895	1840	1780	1705
	8	2100	2070	2040	2005	1975	1940	1900	1860	1820	1765	1710	1645	1575
	7,5	1980	1940	1900	1860	1820	1780	1740	1700	1645	1600	1540	1470	1385
	7	1830	1800	1760	1725	1685	1645	1605	1565	1520	1465	1400	1335	1225
	6,5	1740	1690	1645	1600	1555	1510	1460	1410	1355	1295	1210	1110	950
	6	1590	1545	1500	1460	1410	1365	1320	1265	1200	1135	1060	940	700
	5,5	1465	1420	1380	1330	1280	1225	1170	1105	1040	960	840	660	340
	5	1345	1300	1245	1195	1140	1085	1025	960	880	780	650	300	-
	4,5	1240	1180	1115	1050	990	925	855	780	695	585	420	-	-
	4	1080	1015	960	900	840	780	705	630	540	420	-	-	-
	3	930	840	760	685	620	555	480	405	320	-	-	-	-
	2	760	660	560	460	380	-	-	-	-	-	-	-	-
	1	620	490	380	-	-	-	-	-	-	-	-	-	-
DFCL-ECM 34	10	3290	3240	3190	3140	3100	3050	3000	2960	2910	2860	2820	2770	2720
	9,5	3120	3080	3045	3000	2960	2920	2880	2835	2790	2740	2690	2640	2600
	9	3000	2960	2920	2880	2840	2800	2760	2710	2660	2610	2560	2510	2460
	8,5	2840	2805	2770	2735	2695	2650	2605	2560	2520	2470	2415	2360	2300
	8	2720	2680	2640	2600	2565	2525	2480	2425	2370	2310	2250	2190	2130
	7,5	2525	2485	2455	2415	2375	2330	2280	2225	2175	2115	2055	1990	1930
	7	2380	2335	2295	2250	2005	2160	2100	2040	1980	1920	1860	1795	1735
	6,5	2200	2155	2110	2065	2015	1950	1890	1830	1760	1700	1640	1580	1520
	6	2040	1980	1920	1860	1800	1730	1665	1600	1540	1480	1430	1375	1320
	5,5	1840	1795	1750	1690	1630	1560	1495	1425	1360	1300	1240	1190	1140
	5	1720	1650	1585	1510	1420	1350	1280	1205	1155	1100	1055	1000	960
	4,5	1540	1490	1420	1340	1255	1180	1120	1060	1000	945	895	840	800
	4	1430	1340	1250	1155	1080	1010	945	885	835	785	740	700	655
	3	1170	1060	940	840	755	685	630	575	520	465	-	-	-
	2	900	760	640	550	475	405	-	-	-	-	-	-	-
	1	740	550	440	355	-	-	-	-	-	-	-	-	-

		Available pressure (Pa)												
Mod.	Vdc	0	10	20	30	40	50	60	70	80	90	100	110	120
DFCL-ECM 44	10	3475	3425	3380	3335	3280	3240	3185	3140	3085	3035	2980	2930	2880
	9,5	3320	3280	3240	3200	3155	3105	3060	3010	2960	2905	2855	2800	2740
	9	3200	3160	3120	3080	3035	2980	2940	2885	2830	2730	2720	2660	2605
	8,5	3335	2990	2945	2900	2860	2805	2760	2700	2650	2600	2540	2480	2420
	8	2875	2830	2780	2740	2690	2640	2580	2530	2475	2420	2360	2295	2235
	7,5	2690	2640	2590	2540	2495	2440	2380	2330	2270	2205	2145	2080	2020
	7	2510	2460	2405	2360	2300	2240	2180	2120	2060	2000	1940	1880	1815
	6,5	2340	2280	2230	2180	2120	2060	2000	1935	1870	1800	1740	1670	1600
	6	2170	2115	2060	1995	1930	1860	1795	1720	1645	1580	1500	1435	1360
	5,5	2020	1960	1895	1825	1760	1680	1605	1535	1460	1385	1310	1240	1170
	5	1860	1790	1720	1640	1565	1495	1410	1330	1255	1180	1110	1040	975
	4,5	1700	1620	1540	1460	1375	1285	1210	1135	1060	990	920	855	795
	4	1500	1420	1320	1240	1155	1070	995	920	850	790	720	660	-
	3	1250	1120	1000	900	810	730	660	585	-	-	-	-	-
	2	940	800	680	580	485	-	-	-	-	-	-	-	-
	1	730	570	460	-	-	-	-	-	-	-	-	-	-
DFCL-ECM 54	10	5095	5060	5020	4985	4945	4900	4860	4810	4760	4700	4645	4580	4515
	9,5	4910	4880	4840	4805	4765	4725	4680	4640	4580	4525	4465	4400	4335
	9	4775	4740	4705	4665	4625	4580	4535	4480	4430	4375	4310	4240	4160
	8,5	4630	4595	4560	4520	4475	4430	4380	4335	4280	4220	4150	4080	4000
	8	4505	4465	4430	4395	4350	4300	4260	4200	4150	4080	4020	3940	3855
	7,5	4355	4320	4280	4240	4200	4160	4100	4050	3995	3930	3850	3765	3675
	7	4235	4200	4160	4120	4075	4025	3980	3920	3850	3775	3695	3600	3480
	6,5	4085	4040	4010	3970	3920	3860	3800	3740	3675	3590	3500	3380	3245
	6	3960	3920	3880	3825	3780	3720	3660	3580	3505	3420	3300	3170	3000
	5,5	3690	3660	3620	3580	3540	3490	3440	3375	3300	3205	3100	2945	2740
	5	3550	3520	3485	3445	3400	3355	3300	3230	3145	3040	2900	2685	2415
	4,5	3240	3210	3170	3125	3080	3025	2960	2885	2795	2690	2540	2345	2080
	4	3055	3020	2980	2940	2885	2825	2760	2690	2595	2480	2300	2040	1660
	3	2580	2525	2480	2420	2360	2300	2220	2130	2020	1860	1605	1120	-
	2	2020	1940	1860	1780	1710	1640	1555	1460	1340	1260	-	-	-
	1	1480	1400	1300	1180	1065	-	-	-	-	-	-	-	-

		Available pressure (Pa)												
Mod.	Vdc	0	20	40	60	80	100	120	140	160	180	200	220	240
DFCL-ECM 64	10	5945	5900	5840	5800	5750	5700	5650	5600	5550	5480	5380	5275	5125
	9,5	5545	5500	5470	5425	5395	5350	5300	5250	5170	5100	5000	4875	4700
	9	5340	5300	5270	5225	5190	5130	5085	5005	4945	5850	4710	4550	4325
	8,5	5190	5150	5110	5080	5035	4990	4930	4860	4775	4650	4500	4300	4050
	8	5085	5040	5000	4970	4920	4875	4800	4720	4625	4480	4270	4000	3775
	7,5	4940	4900	4870	4810	4765	4700	4630	4540	4400	4220	3975	3725	3500
	7	4825	4780	4730	4690	4625	4560	4480	4350	4175	3950	3675	3450	4225
	6,5	4620	4575	4520	4480	4410	4325	4220	4075	3850	3600	3380	3160	2940
	6	4410	4360	4300	4240	4180	4100	3970	3775	3540	3320	3100	2900	2660
	5,5	4155	4100	4050	4000	3910	3800	3630	3380	3150	2950	2740	2515	2150
	5	3965	3900	3835	3770	3680	3485	3200	2980	2800	2625	2450	2160	-
	4,5	3710	3650	3600	3530	3380	3125	2825	2650	2500	2315	2050	1700	-
	4	3510	3425	3330	3230	3040	2740	2520	2325	2100	1900	1660	-	-
	3	2900	2825	2735	2530	2180	1925	1675	1500	1270	-	-	-	-
	2	2310	2080	1825	1500	1270	1045	-	-	-	-	-	-	-
	1	1740	1500	950	700	-	-	-	-	-	-	-	-	-

Vdc = Inverter power

Power absorption depending on air flow and available pressure

Power absorbed (Watt)

		Available pressure (Pa)												
Mod.	Vdc	0	10	20	30	40	50	60	70	80	90	100	110	120
DFCL-ECM 14	10	154	158	161	164	168	170	172	172	172	170	167	163	157
	9,5	142	146	150	154	157	158	159	158	157	154	149	144	137
	9	133	137	140	143	144	146	145	144	140	135	130	123	117
	8,5	122	126	130	133	134	133	131	127	122	116	110	105	100
	8	113	118	120	121	120	118	114	109	103	68	93	88	83
	7,5	104	108	110	110	107	103	98	93	88	84	79	74	70
	7	96	98	98	96	92	87	82	78	74	70	65	60	-
	6,5	88	86	84	82	78	74	69	65	60	56	-	-	-
	6	75	74	71	68	64	60	56	52	46	-	-	-	-
	5,5	65	63	60	57	54	50	45	40	-	-	-	-	-
	5	55	53	50	47	43	38	34	-	-	-	-	-	-
	4,5	47	45	42	38	34	30	-	-	-	-	-	-	-
	4	40	37	34	30	26	24	-	-	-	-	-	-	-
	3	26	23	20	18	-	-	-	-	-	-	-	-	-
	2	16	14	12	-	-	-	-	-	-	-	-	-	-
	1	10		-	-	-	-	-	-	-	-	-	-	-
DFCL-ECM 24	10	372	374	378	380	384	385	385	384	382	378	374	367	358
	9,5	324	328	332	336	338	339	340	340	338	336	332	326	318
	9	290	293	297	300	305	306	307	306	304	302	298	293	285
	8,5	254	254	255	255	256	256	256	256	256	254	253	250	244
	8	206	210	212	214	216	220	222	224	228	228	226	224	220
	7,5	183	183	183	183	184	186	188	189	190	190	190	187	180
	7	142	144	146	149	152	156	159	162	163	164	163	161	152
	6,5	125	127	128	130	132	134	136	136	137	136	133	128	116
	6	102	104	105	107	109	112	114	116	116	116	115	110	84
	5,5	86	87	88	89	91	92	94	95	96	96	92	82	61
	5	66	66	68	70	72	74	77	80	80	80	74	53	-
	4,5	48	52	56	60	61	63	64	66	66	63	55	-	-
	4	42	43	44	46	49	52	54	56	55	51	-	-	-
	3	25	27	29	31	33	35	37	38	38	-	-	-	-
	2	16	17	19	21	22	-	-	-	-	-	-	-	-
	1	12	13	14	-	-	-	-	-	-	-	-	-	-
DFCL-ECM 34	10	542	542	542	542	542	540	538	536	534	533	532	530	530
	9,5	473	476	480	482	482	482	482	482	480	479	478	478	478
	9	424	426	428	429	430	430	429	428	426	425	424	452	423
	8,5	375	377	380	383	383	383	383	382	382	382	382	382	382
	8	337	338	340	340	341	342	342	339	337	338	338	338	340
	7,5	264	266	272	276	280	282	284	286	288	290	292	294	296
	7	220	224	228	232	233	238	240	242	243	246	246	250	252
	6,5	178	182	186	190	194	197	200	202	204	206	208	211	213
	6	144	147	150	153	156	158	160	164	166	170	172	174	176
	5,5	116	118	120	123	126	129	132	135	137	140	142	144	145
	5	85	88	92	94	98	100	103	106	108	111	113	115	117
	4,5	72	74	76	78	82	84	86	89	92	94	96	97	98
	4	54	57	60	63	65	67	69	71	73	75	76	78	80
	3	30	34	37	39	41	43	44	46	47	48	-	-	-
	2	20	21	22	23	24	26	-	-	-	-	-	-	-
	1	13	14	15	16	-	-	-	-	-	-	-	-	-

		Available pressure (Pa)												
Mod.	Vdc	0	10	20	30	40	50	60	70	80	90	100	110	120
DFCL-ECM 44	10	506	516	524	533	536	538	538	536	535	533	530	528	527
	9,5	536	447	456	462	466	472	474	476	477	476	476	476	475
	9	386	395	404	410	418	422	424	426	427	427	427	427	426
	8,5	330	336	342	347	350	355	358	362	364	366	368	370	372
	8	273	279	286	291	296	302	307	311	314	317	320	322	325
	7,5	226	232	238	244	248	254	257	260	264	267	270	272	275
	7	184	186	193	197	203	206	210	214	218	222	226	228	232
	6,5	155	158	162	164	168	172	176	180	185	189	192	196	200
	6	120	124	127	132	136	140	144	148	153	156	160	164	166
	5,5	100	104	106	111	114	119	122	126	129	132	136	138	140
	5	78	82	85	89	93	96	98	102	104	107	110	112	115
	4,5	70	70	71	73	76	80	82	84	87	89	92	94	96
	4	48	51	55	58	60	62	64	66	68	70	72	74	-
	3	30	34	36	38	40	41	42	42	-	-	-	-	-
	2	18	20	22	22	24	-	-	-	-	-	-	-	-
	1	12	14	14	-	-	-	-	-	-	-	-	-	-
DFCL-ECM 54	10	1031	1035	1039	1041	1043	1043	1043	1041	1038	1033	1027	1019	1008
	9,5	907	911	916	919	922	924	924	924	922	919	915	908	900
	9	803	809	814	819	823	826	829	830	829	828	824	819	810
	8,5	749	754	759	764	768	770	772	773	772	769	765	759	749
	8	701	707	712	715	719	721	722	722	721	717	713	705	694
	7,5	644	649	654	658	661	662	663	663	661	656	649	639	626
	7	594	599	604	607	609	611	610	609	604	598	589	576	557
	6,5	528	535	538	542	545	547	547	546	542	535	525	508	487
	6	476	482	488	493	496	497	497	495	490	482	468	449	423
	5,5	400	405	412	418	422	425	427	428	426	420	410	391	362
	5	349	356	363	370	376	380	384	385	383	377	363	336	298
	4,5	273	281	289	297	304	309	313	315	313	307	294	273	243
	4	235	244	253	260	268	273	277	277	275	268	252	224	189
	3	144	152	158	165	170	174	177	179	178	173	159	126	-
	2	79	85	90	96	100	103	107	109	111	111	-	-	-
	1	41	43	45	50	55	-	-	-	-	-	-	-	-

		Available pressure (Pa)												
Mod.	Vdc	0	20	40	60	80	100	120	140	160	180	200	220	240
DFCL-ECM 64	10	816	842	872	890	909	925	939	951	961	972	983	991	997
	9,5	691	714	728	747	759	775	790	804	823	836	851	865	879
	9	570	591	607	627	642	665	680	702	716	740	755	770	784
	8,5	537	555	571	583	599	613	631	648	667	688	708	727	743
	8	482	501	517	528	545	559	580	600	620	645	672	695	706
	7,5	442	457	467	487	500	517	533	551	575	599	625	644	655
	7	390	405	420	431	448	462	478	501	528	557	585	602	520
	6,5	330	347	365	377	395	414	434	456	485	511	529	541	545
	6	299	313	329	342	354	368	387	411	437	459	476	486	488
	5,5	239	261	278	292	313	331	350	372	392	409	422	429	414
	5	215	233	248	258	269	285	307	329	349	366	378	381	-
	4,5	158	180	194	210	233	254	278	294	307	320	326	307	-
	4	146	166	180	189	198	216	237	257	275	283	278	-	-
	3	93	106	116	128	139	155	173	184	191	-	-	-	-
	2	53	65	74	84	93	102	-	-	-	-	-	-	-
	1	28	35	46	52	-	-	-	-	-	-	-	-	-

Vdc = Inverter power

Correction factors for Total cooling emission

Values in %

		Available pressure (Pa)												
Mod.	Vdc	0	10	20	30	40	50	60	70	80	90	100	110	120
DFCL-ECM 14	10	1,00	0,99	0,98	0,97	0,95	0,94	0,92	0,91	0,89	0,86	0,84	0,81	0,77
	9,5	1,00	0,99	0,98	0,97	0,95	0,93	0,92	0,90	0,87	0,85	0,81	0,78	0,74
	9	1,00	0,99	0,98	0,96	0,95	0,93	0,90	0,88	0,85	0,82	0,78	0,74	0,69
	8,5	1,00	0,99	0,97	0,96	0,94	0,92	0,89	0,86	0,82	0,78	0,73	0,69	0,64
	8	1,00	0,99	0,97	0,95	0,93	0,90	0,87	0,82	0,78	0,73	0,68	0,63	0,57
	7,5	1,00	0,98	0,96	0,94	0,91	0,88	0,84	0,79	0,74	0,68	0,62	0,55	0,49
	7	1,00	0,98	0,95	0,92	0,89	0,85	0,80	0,75	0,68	0,61	0,54	0,46	-
	6,5	1,00	0,97	0,94	0,91	0,87	0,82	0,75	0,68	0,61	0,53	-	-	-
	6	1,00	0,97	0,93	0,89	0,84	0,77	0,70	0,62	0,52	-	-	-	-
	5,5	1,00	0,96	0,92	0,87	0,80	0,72	0,62	0,51	-	-	-	-	-
	5	1,00	0,95	0,90	0,83	0,75	0,63	0,51	-	-	-	-	-	-
	4,5	1,00	0,95	0,88	0,79	0,68	0,54	-	-	-	-	-	-	-
	4	1,00	0,94	0,85	0,73	0,59	0,42	-	-	-	-	-	-	-
	3	1,00	0,89	0,73	0,51	-	-	-	-	-	-	-	-	-
	2	1,00	0,81	0,41	-	-	-	-	-	-	-	-	-	-
	1	1,00	-	-	-	-	-	-	-	-	-	-	-	-
DFCL-ECM 24	10	1,00	0,99	0,99	0,98	0,98	0,97	0,96	0,96	0,95	0,94	0,93	0,91	0,90
	9,5	1,00	0,99	0,99	0,98	0,98	0,97	0,96	0,95	0,94	0,93	0,92	0,91	0,89
	9	1,00	0,99	0,99	0,98	0,98	0,97	0,96	0,95	0,94	0,93	0,92	0,90	0,88
	8,5	1,00	0,99	0,98	0,98	0,97	0,96	0,95	0,94	0,93	0,92	0,90	0,89	0,86
	8	1,00	0,99	0,98	0,98	0,97	0,96	0,95	0,94	0,93	0,91	0,90	0,88	0,85
	7,5	1,00	0,99	0,98	0,97	0,96	0,95	0,93	0,92	0,91	0,89	0,87	0,85	0,82
	7	1,00	0,99	0,98	0,97	0,96	0,95	0,93	0,92	0,91	0,89	0,86	0,84	0,80
	6,5	1,00	0,98	0,97	0,96	0,94	0,93	0,91	0,89	0,87	0,85	0,82	0,77	0,70
	6	1,00	0,98	0,97	0,96	0,94	0,92	0,91	0,88	0,86	0,83	0,79	0,74	0,61
	5,5	1,00	0,98	0,97	0,95	0,93	0,91	0,89	0,86	0,83	0,79	0,72	0,62	0,40
	5	1,00	0,98	0,96	0,94	0,92	0,89	0,86	0,83	0,79	0,73	0,65	0,39	-
	4,5	1,00	0,97	0,95	0,92	0,89	0,85	0,81	0,77	0,71	0,63	0,51	-	-
	4	1,00	0,97	0,94	0,91	0,87	0,83	0,78	0,73	0,66	0,56	-	-	-
	3	1,00	0,95	0,90	0,84	0,79	0,74	0,67	0,60	0,51	-	-	-	-
	2	1,00	0,93	0,84	0,75	0,66	-	-	-	-	-	-	-	-
	1	1,00	0,88	0,75	-	-	-	-	-	-	-	-	-	-
DFCL-ECM 34	10	1,00	0,99	0,98	0,97	0,97	0,96	0,95	0,95	0,94	0,93	0,92	0,91	0,90
	9,5	1,00	0,99	0,99	0,98	0,97	0,97	0,96	0,95	0,94	0,93	0,92	0,91	0,91
	9	1,00	0,99	0,98	0,98	0,97	0,96	0,96	0,95	0,94	0,93	0,92	0,91	0,90
	8,5	1,00	0,99	0,99	0,98	0,97	0,96	0,96	0,95	0,94	0,93	0,92	0,91	0,89
	8	1,00	0,99	0,98	0,98	0,97	0,96	0,95	0,94	0,93	0,92	0,90	0,89	0,88
	7,5	1,00	0,99	0,98	0,98	0,97	0,96	0,95	0,94	0,92	0,91	0,89	0,88	0,86
	7	1,00	0,99	0,98	0,97	0,96	0,95	0,94	0,92	0,91	0,89	0,87	0,86	0,84
	6,5	1,00	0,99	0,98	0,97	0,95	0,94	0,92	0,91	0,89	0,87	0,85	0,83	0,81
	6	1,00	0,98	0,97	0,95	0,94	0,92	0,90	0,88	0,86	0,84	0,82	0,80	0,78
	5,5	1,00	0,99	0,97	0,96	0,94	0,92	0,89	0,87	0,85	0,82	0,80	0,78	0,76
	5	1,00	0,98	0,96	0,93	0,90	0,88	0,85	0,82	0,80	0,77	0,75	0,73	0,71
	4,5	1,00	0,98	0,96	0,93	0,90	0,86	0,84	0,81	0,78	0,75	0,73	0,70	0,68
	4	1,00	0,97	0,93	0,89	0,86	0,82	0,79	0,76	0,73	0,70	0,67	0,65	0,62
	3	1,00	0,95	0,89	0,83	0,78	0,73	0,69	0,65	0,61	0,57	-	-	-
	2	1,00	0,91	0,83	0,75	0,68	0,62	-	-	-	-	-	-	-
	1	1,00	0,85	0,74	0,64	-	-	-	-	-	-	-	-	-

		Available pressure (Pa)												
Mod.	Vdc	0	10	20	30	40	50	60	70	80	90	100	110	120
DFCL-ECM 44	10	1,00	0,99	0,98	0,98	0,97	0,96	0,95	0,95	0,94	0,93	0,92	0,91	0,90
	9,5	1,00	0,99	0,99	0,98	0,97	0,96	0,96	0,95	0,94	0,93	0,92	0,91	0,90
	9	1,00	0,99	0,99	0,98	0,97	0,96	0,96	0,95	0,94	0,92	0,92	0,91	0,90
	8,5	1,00	0,99	0,98	0,98	0,97	0,96	0,95	0,94	0,93	0,92	0,91	0,90	0,88
	8	1,00	0,99	0,98	0,97	0,97	0,96	0,94	0,93	0,92	0,91	0,90	0,89	0,87
	7,5	1,00	0,99	0,98	0,97	0,96	0,95	0,94	0,93	0,91	0,90	0,88	0,87	0,85
	7	1,00	0,99	0,98	0,97	0,95	0,94	0,93	0,91	0,90	0,88	0,87	0,85	0,83
	6,5	1,00	0,99	0,97	0,96	0,95	0,93	0,92	0,90	0,89	0,87	0,85	0,83	0,81
	6	1,00	0,99	0,97	0,96	0,94	0,92	0,90	0,88	0,86	0,84	0,81	0,79	0,76
	5,5	1,00	0,98	0,97	0,95	0,93	0,91	0,88	0,86	0,83	0,81	0,78	0,75	0,73
	5	1,00	0,98	0,96	0,94	0,91	0,89	0,86	0,83	0,80	0,77	0,74	0,71	0,68
	4,5	1,00	0,97	0,95	0,92	0,89	0,86	0,83	0,80	0,76	0,73	0,70	0,66	0,63
	4	1,00	0,97	0,93	0,90	0,87	0,83	0,79	0,75	0,72	0,68	0,64	0,61	-
	3	1,00	0,94	0,89	0,83	0,78	0,73	0,68	0,63	-	-	-	-	-
	2	1,00	0,92	0,84	0,76	0,67	-	-	-	-	-	-	-	-
	1	1,00	0,87	0,77	-	-	-	-	-	-	-	-	-	-
DFCL-ECM 54	10	1,00	0,99	0,99	0,99	0,98	0,98	0,97	0,97	0,96	0,96	0,95	0,95	0,94
	9,5	1,00	0,99	0,99	0,99	0,98	0,98	0,97	0,97	0,96	0,96	0,95	0,94	0,94
	9	1,00	0,99	0,99	0,99	0,98	0,98	0,97	0,97	0,96	0,95	0,95	0,94	0,93
	8,5	1,00	0,99	0,99	0,99	0,98	0,98	0,97	0,97	0,96	0,95	0,94	0,94	0,93
	8	1,00	0,99	0,99	0,99	0,98	0,98	0,97	0,96	0,96	0,95	0,94	0,93	0,92
	7,5	1,00	0,99	0,99	0,98	0,98	0,98	0,97	0,96	0,96	0,95	0,94	0,93	0,91
	7	1,00	0,99	0,99	0,98	0,98	0,97	0,97	0,96	0,95	0,94	0,93	0,92	0,90
	6,5	1,00	0,99	0,99	0,98	0,98	0,97	0,96	0,95	0,95	0,93	0,92	0,90	0,88
	6	1,00	0,99	0,99	0,98	0,98	0,97	0,96	0,95	0,94	0,93	0,91	0,89	0,86
	5,5	1,00	0,99	0,99	0,98	0,98	0,97	0,96	0,95	0,94	0,93	0,91	0,88	0,85
	5	1,00	0,99	0,99	0,98	0,98	0,97	0,96	0,95	0,94	0,92	0,90	0,86	0,80
	4,5	1,00	0,99	0,99	0,98	0,97	0,96	0,95	0,94	0,92	0,91	0,88	0,84	0,78
	4	1,00	0,99	0,99	0,98	0,97	0,96	0,95	0,93	0,92	0,89	0,86	0,80	0,70
	3	1,00	0,99	0,98	0,97	0,95	0,94	0,92	0,90	0,88	0,83	0,76	0,60	-
	2	1,00	0,98	0,96	0,94	0,91	0,89	0,87	0,83	0,79	0,76	-	-	-
	1	1,00	0,97	0,93	0,88	0,83	-	-	-	-	-	-	-	-

		Available pressure (Pa)												
Mod.	Vdc	0	20	40	60	80	100	120	140	160	180	200	220	240
DFCL-ECM 64	10	1,00	0,99	0,99	0,99	0,98	0,98	0,97	0,97	0,96	0,96	0,95	0,94	0,92
	9,5	1,00	0,99	0,99	0,99	0,98	0,98	0,98	0,97	0,96	0,96	0,95	0,93	0,92
	9	1,00	0,99	0,99	0,99	0,98	0,98	0,97	0,97	0,96	1,04	0,94	0,92	0,89
	8,5	1,00	0,99	0,99	0,99	0,98	0,98	0,97	0,97	0,96	0,94	0,93	0,90	0,87
	8	1,00	0,99	0,99	0,99	0,98	0,98	0,97	0,96	0,95	0,94	0,91	0,88	0,85
	7,5	1,00	0,99	0,99	0,98	0,98	0,97	0,97	0,96	0,94	0,92	0,89	0,86	0,82
	7	1,00	0,99	0,99	0,98	0,98	0,97	0,96	0,95	0,93	0,90	0,86	0,83	0,93
	6,5	1,00	0,99	0,99	0,98	0,98	0,97	0,95	0,94	0,91	0,87	0,84	0,81	0,77
	6	1,00	0,99	0,99	0,98	0,97	0,96	0,95	0,92	0,89	0,86	0,82	0,79	0,75
	5,5	1,00	0,99	0,99	0,98	0,97	0,95	0,93	0,89	0,86	0,83	0,79	0,75	0,67
	5	1,00	0,99	0,98	0,97	0,96	0,93	0,89	0,85	0,82	0,79	0,76	0,70	-
	4,5	1,00	0,99	0,98	0,97	0,95	0,91	0,86	0,83	0,80	0,76	0,70	0,62	-
	4	1,00	0,99	0,97	0,96	0,93	0,87	0,83	0,79	0,74	0,70	0,64	-	-
	3	1,00	0,98	0,97	0,93	0,85	0,79	0,73	0,67	0,60	-	-	-	-
	2	1,00	0,95	0,88	0,78	0,70	0,62	-	-	-	-	-	-	-
	1	1,00	0,92	0,70	-	-	-	-	-	-	-	-	-	-

Vdc = Inverter power

Correction factors for Sensible cooling emission and Heating emission

Values in %

		Available pressure (Pa)												
Mod.	Vdc	0	10	20	30	40	50	60	70	80	90	100	110	120
DFCL-ECM 14	10	1,00	0,99	0,97	0,96	0,94	0,92	0,90	0,88	0,85	0,83	0,79	0,76	0,72
	9,5	1,00	0,99	0,97	0,95	0,93	0,91	0,89	0,86	0,84	0,80	0,77	0,73	0,69
	9	1,00	0,98	0,97	0,95	0,93	0,90	0,88	0,85	0,81	0,77	0,73	0,68	0,63
	8,5	1,00	0,98	0,96	0,94	0,92	0,89	0,86	0,82	0,78	0,73	0,68	0,63	0,58
	8	1,00	0,98	0,96	0,94	0,91	0,87	0,83	0,78	0,73	0,67	0,62	0,56	0,50
	7,5	1,00	0,98	0,95	0,92	0,88	0,84	0,79	0,74	0,68	0,62	0,55	0,49	0,42
	7	1,00	0,97	0,94	0,90	0,86	0,81	0,75	0,69	0,62	0,55	0,47	0,40	-
	6,5	1,00	0,96	0,93	0,88	0,83	0,77	0,70	0,62	0,54	0,46	-	-	-
	6	1,00	0,96	0,91	0,86	0,79	0,72	0,64	0,55	0,45	-	-	-	-
	5,5	1,00	0,95	0,89	0,83	0,75	0,66	0,56	0,45	-	-	-	-	-
	5	1,00	0,94	0,87	0,79	0,69	0,57	0,44	-	-	-	-	-	-
	4,5	1,00	0,93	0,84	0,74	0,61	0,47	-	-	-	-	-	-	-
	4	1,00	0,92	0,81	0,68	0,52	0,36	-	-	-	-	-	-	-
	3	1,00	0,86	0,67	0,45	-	-	-	-	-	-	-	-	-
	2	1,00	0,76	0,35	-	-	-	-	-	-	-	-	-	-
	1	1,00	-	-	-	-	-	-	-	-	-	-	-	-
DFCL-ECM 24	10	1,00	0,99	0,98	0,98	0,97	0,96	0,95	0,94	0,93	0,92	0,90	0,89	0,87
	9,5	1,00	0,99	0,98	0,98	0,97	0,96	0,95	0,94	0,93	0,91	0,90	0,88	0,86
	9	1,00	0,99	0,98	0,98	0,97	0,96	0,95	0,94	0,92	0,91	0,89	0,87	0,85
	8,5	1,00	0,99	0,98	0,97	0,96	0,95	0,94	0,92	0,91	0,89	0,87	0,85	0,83
	8	1,00	0,99	0,98	0,97	0,96	0,95	0,93	0,92	0,90	0,88	0,86	0,84	0,81
	7,5	1,00	0,98	0,97	0,96	0,94	0,93	0,91	0,90	0,88	0,86	0,84	0,81	0,77
	7	1,00	0,99	0,97	0,96	0,94	0,93	0,91	0,90	0,88	0,85	0,83	0,80	0,75
	6,5	1,00	0,98	0,96	0,94	0,92	0,90	0,88	0,86	0,84	0,81	0,77	0,72	0,64
	6	1,00	0,98	0,96	0,94	0,92	0,90	0,88	0,85	0,82	0,78	0,75	0,68	0,54
	5,5	1,00	0,98	0,96	0,93	0,91	0,88	0,85	0,82	0,78	0,74	0,66	0,55	0,33
	5	1,00	0,98	0,95	0,92	0,89	0,86	0,82	0,78	0,73	0,67	0,58	0,32	-
	4,5	1,00	0,97	0,93	0,89	0,85	0,81	0,76	0,71	0,65	0,57	0,44	-	-
	4	1,00	0,96	0,92	0,88	0,84	0,79	0,73	0,67	0,60	0,49	-	-	-
	3	1,00	0,93	0,87	0,80	0,75	0,68	0,61	0,54	0,45	-	-	-	-
	2	1,00	0,91	0,80	0,69	0,60	-	-	-	-	-	-	-	-
	1	1,00	0,85	0,70	-	-	-	-	-	-	-	-	-	-
DFCL-ECM 34	10	1,00	0,99	0,98	0,97	0,96	0,95	0,94	0,93	0,92	0,91	0,90	0,89	0,87
	9,5	1,00	0,99	0,98	0,97	0,96	0,95	0,94	0,93	0,92	0,91	0,90	0,89	0,88
	9	1,00	0,99	0,98	0,97	0,96	0,95	0,94	0,93	0,92	0,91	0,89	0,88	0,87
	8,5	1,00	0,99	0,98	0,97	0,96	0,95	0,94	0,93	0,92	0,91	0,89	0,88	0,86
	8	1,00	0,99	0,98	0,97	0,96	0,95	0,94	0,92	0,91	0,89	0,87	0,86	0,84
	7,5	1,00	0,99	0,98	0,97	0,96	0,94	0,93	0,91	0,90	0,88	0,86	0,84	0,83
	7	1,00	0,99	0,97	0,96	0,95	0,93	0,92	0,90	0,88	0,86	0,84	0,82	0,80
	6,5	1,00	0,98	0,97	0,96	0,94	0,92	0,90	0,88	0,85	0,83	0,81	0,79	0,77
	6	1,00	0,98	0,96	0,94	0,92	0,89	0,87	0,84	0,82	0,79	0,77	0,75	0,73
	5,5	1,00	0,98	0,96	0,94	0,92	0,89	0,86	0,83	0,80	0,78	0,75	0,73	0,70
	5	1,00	0,97	0,94	0,91	0,87	0,84	0,81	0,77	0,75	0,72	0,70	0,67	0,65
	4,5	1,00	0,98	0,94	0,91	0,86	0,83	0,80	0,76	0,73	0,70	0,67	0,64	0,62
	4	1,00	0,95	0,91	0,86	0,82	0,78	0,74	0,70	0,67	0,64	0,61	0,59	0,56
	3	1,00	0,93	0,86	0,79	0,73	0,67	0,63	0,59	0,55	0,50	-	-	-
	2	1,00	0,89	0,78	0,70	0,62	0,55	-	-	-	-	-	-	-
	1	1,00	0,81	0,68	0,58	-	-	-	-	-	-	-	-	-

		Available pressure (Pa)												
Mod.	Vdc	0	10	20	30	40	50	60	70	80	90	100	110	120
DFCL-ECM 44	10	1,00	0,99	0,98	0,97	0,96	0,95	0,94	0,93	0,92	0,91	0,90	0,89	0,88
	9,5	1,00	0,99	0,98	0,97	0,96	0,95	0,94	0,93	0,92	0,91	0,90	0,89	0,87
	9	1,00	0,99	0,98	0,97	0,96	0,95	0,94	0,93	0,92	0,89	0,89	0,88	0,86
	8,5	1,00	0,99	0,98	0,97	0,96	0,95	0,94	0,92	0,91	0,90	0,88	0,87	0,85
	8	1,00	0,99	0,98	0,97	0,95	0,94	0,93	0,91	0,90	0,89	0,87	0,85	0,84
	7,5	1,00	0,99	0,97	0,96	0,95	0,93	0,92	0,90	0,89	0,87	0,85	0,83	0,81
	7	1,00	0,98	0,97	0,96	0,94	0,92	0,91	0,89	0,87	0,85	0,83	0,81	0,79
	6,5	1,00	0,98	0,97	0,95	0,93	0,91	0,89	0,87	0,85	0,83	0,81	0,78	0,76
	6	1,00	0,98	0,96	0,94	0,92	0,90	0,87	0,85	0,82	0,80	0,77	0,74	0,71
	5,5	1,00	0,98	0,96	0,93	0,91	0,88	0,85	0,82	0,79	0,76	0,73	0,70	0,67
	5	1,00	0,97	0,95	0,91	0,88	0,86	0,82	0,79	0,75	0,72	0,68	0,65	0,62
	4,5	1,00	0,97	0,93	0,90	0,86	0,82	0,78	0,75	0,71	0,67	0,64	0,60	0,57
	4	1,00	0,96	0,91	0,87	0,83	0,78	0,74	0,70	0,66	0,62	0,58	0,54	-
	3	1,00	0,93	0,85	0,79	0,73	0,67	0,62	0,57	-	-	-	-	-
	2	1,00	0,89	0,79	0,70	0,61	-	-	-	-	-	-	-	-
	1	1,00	0,84	0,71	-	-	-	-	-	-	-	-	-	-
DFCL-ECM 54	10	1,00	0,99	0,99	0,98	0,98	0,97	0,97	0,96	0,95	0,94	0,94	0,93	0,92
	9,5	1,00	0,99	0,99	0,98	0,98	0,97	0,97	0,96	0,95	0,94	0,94	0,93	0,92
	9	1,00	0,99	0,99	0,98	0,98	0,97	0,96	0,96	0,95	0,94	0,93	0,92	0,91
	8,5	1,00	0,99	0,99	0,98	0,98	0,97	0,96	0,95	0,95	0,94	0,93	0,91	0,90
	8	1,00	0,99	0,99	0,98	0,97	0,97	0,96	0,95	0,94	0,93	0,92	0,91	0,90
	7,5	1,00	0,99	0,99	0,98	0,97	0,97	0,96	0,95	0,94	0,93	0,92	0,90	0,89
	7	1,00	0,99	0,99	0,98	0,97	0,96	0,96	0,95	0,93	0,92	0,91	0,89	0,87
	6,5	1,00	0,99	0,99	0,98	0,97	0,96	0,95	0,94	0,93	0,91	0,90	0,87	0,85
	6	1,00	0,99	0,98	0,98	0,97	0,96	0,95	0,93	0,92	0,90	0,88	0,85	0,82
	5,5	1,00	0,99	0,99	0,98	0,97	0,96	0,95	0,94	0,92	0,91	0,88	0,85	0,81
	5	1,00	0,99	0,99	0,98	0,97	0,96	0,95	0,94	0,92	0,90	0,87	0,82	0,76
	4,5	1,00	0,99	0,98	0,97	0,96	0,95	0,94	0,92	0,90	0,88	0,84	0,79	0,72
	4	1,00	0,99	0,98	0,97	0,96	0,95	0,93	0,91	0,89	0,86	0,82	0,75	0,64
	3	1,00	0,98	0,97	0,96	0,94	0,92	0,90	0,87	0,84	0,79	0,71	0,54	-
	2	1,00	0,97	0,94	0,91	0,89	0,86	0,83	0,79	0,74	0,71	-	-	-
	1	1,00	0,96	0,91	0,85	0,79	-	-	-	-	-	-	-	-

		Available pressure (Pa)												
Mod.	Vdc	0	20	40	60	80	100	120	140	160	180	200	220	240
DFCL-ECM 64	10	1,00	0,99	0,99	0,98	0,98	0,97	0,96	0,96	0,95	0,94	0,93	0,92	0,90
	9,5	1,00	0,99	0,99	0,98	0,98	0,97	0,97	0,96	0,95	0,94	0,93	0,91	0,89
	9	1,00	0,99	0,99	0,98	0,98	0,97	0,97	0,96	0,95	1,06	0,92	0,89	0,86
	8,5	1,00	0,99	0,99	0,98	0,98	0,97	0,96	0,95	0,94	0,93	0,90	0,88	0,84
	8	1,00	0,99	0,99	0,98	0,98	0,97	0,96	0,95	0,94	0,91	0,88	0,84	0,81
	7,5	1,00	0,99	0,99	0,98	0,97	0,97	0,96	0,94	0,92	0,89	0,86	0,82	0,78
	7	1,00	0,99	0,99	0,98	0,97	0,96	0,95	0,93	0,90	0,87	0,82	0,79	0,91
	6,5	1,00	0,99	0,98	0,98	0,97	0,95	0,94	0,92	0,88	0,84	0,80	0,76	0,72
	6	1,00	0,99	0,98	0,97	0,96	0,95	0,93	0,90	0,86	0,82	0,78	0,74	0,69
	5,5	1,00	0,99	0,98	0,97	0,96	0,94	0,91	0,86	0,82	0,78	0,74	0,69	0,61
	5	1,00	0,99	0,98	0,96	0,95	0,91	0,86	0,81	0,78	0,74	0,70	0,64	-
	4,5	1,00	0,99	0,98	0,97	0,94	0,89	0,82	0,78	0,75	0,71	0,65	0,56	-
	4	1,00	0,98	0,96	0,94	0,90	0,84	0,79	0,74	0,69	0,64	0,57	-	-
	3	1,00	0,98	0,96	0,91	0,81	0,74	0,67	0,61	0,54	-	-	-	-
	2	1,00	0,93	0,85	0,73	0,64	0,55	-	-	-	-	-	-	-
	1	1,00	0,90	0,64	-	-	-	-	-	-	-	-	-	-

Vdc = Inverter power

WATER SIDE PRESSURE DROP AND OPERATING LIMITS

Water side pressure drop

2 pipe unit

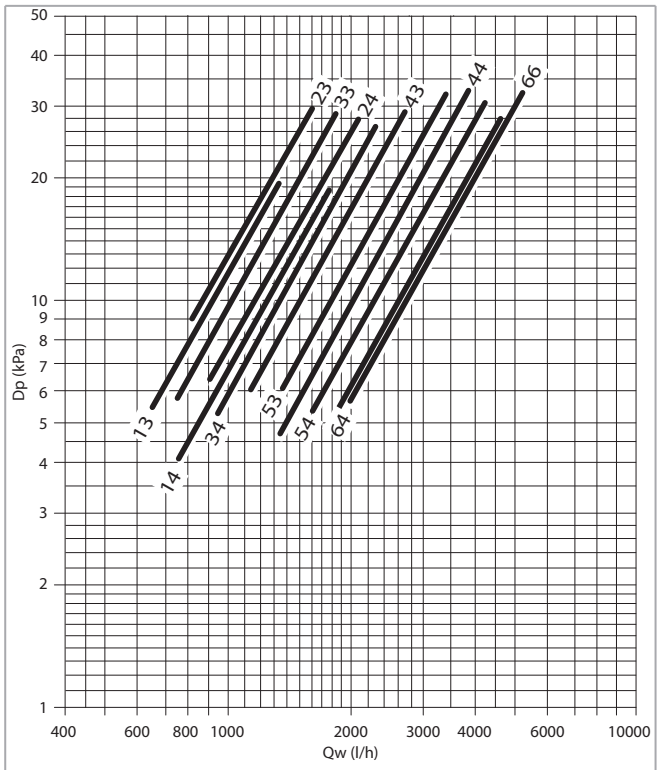

Dp = pressure drop Qw = water flow rate

The water pressure drop figures refer to a mean water temperature of **10 °C** ; for different temperatures multiply the pressure drop figures by the correction factors **K** reported in the table below.

	Mean water temperature (°C)						
	20	30	40	50	60	70	80
K correction factor	0,94	0,90	0,86	0,82	0,78	0,74	0,70

4 pipe unit

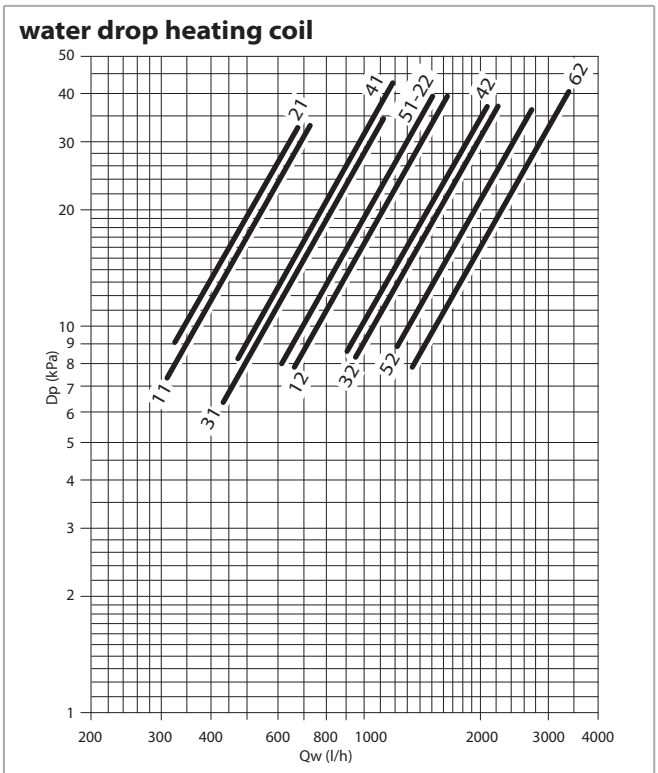

Dp = pressure drop Qw = water flow rate

The water pressure drop figures refer to a mean water temperature of **60 °C**; for different temperatures, multiply the pressure drop figures by the correction factors **K**.

	Mean water temperature (°C)			
	40	50	70	80
K correction factor	1,12	1,06	0,94	0,88

Air side pressure drop

DFCL-ECM 1÷5

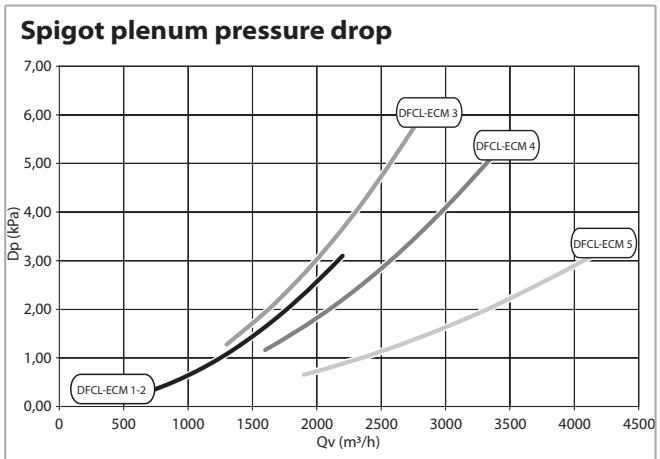

Dp = pressure drop Qv = air flow

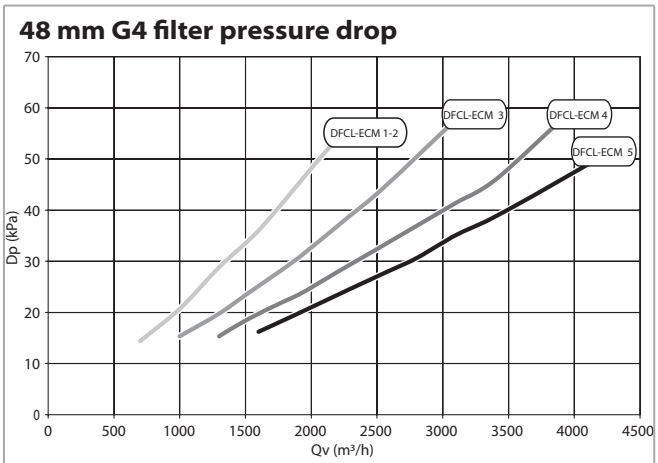

Dp = pressure drop Qv = air flow

DFCL-ECM 6

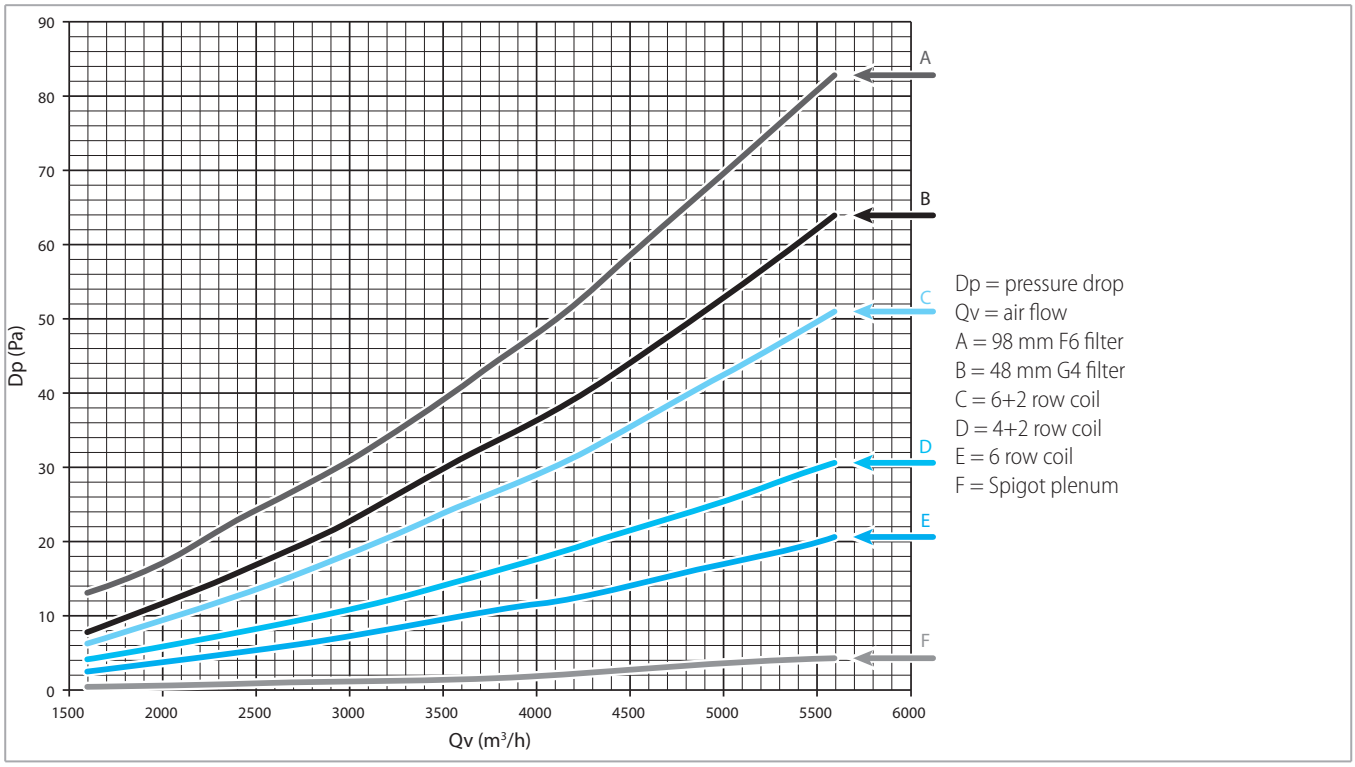

Operation limits

Description		UoM	Value
Water flow	Coil maximum working pressure	bars	16
		kPa	1600
	Lowest water inlet temperature	°C	6
	Highest water inlet temperature	°C	80
Ambient air	Relative humidity	%	15-75
	Minimum temperature	°C	6
	Maximum temperature	°C	40
	MAX. leaving air temperature	**°C**	**50**
Power supply	Single-phase rated operating voltage	V/Hz	230/50-60

Motor electrical data - max. absorption

Model		DFCL-ECM 1	DFCL-ECM 2	DFCL-ECM 3	DFCL-ECM 4	DFCL-ECM 5	DFCL-ECM 6
230/1	W	165	375	545	530	1045	1010
50/60 Hz	A	1,15	1,70	2,40(1) / 3,20(2)	2,35(1) / 3,20(2)	4,60	4,50

(1) with ELCO motor
(2) with Euro Motors Italia motor

DIMENSION, WEIGHT AND WATER CONTENT

Left configuration (standard)

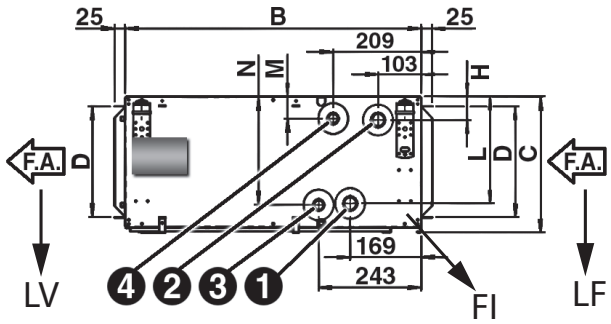

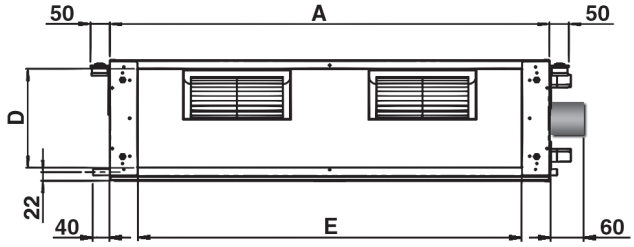

Right configuration (on demand)

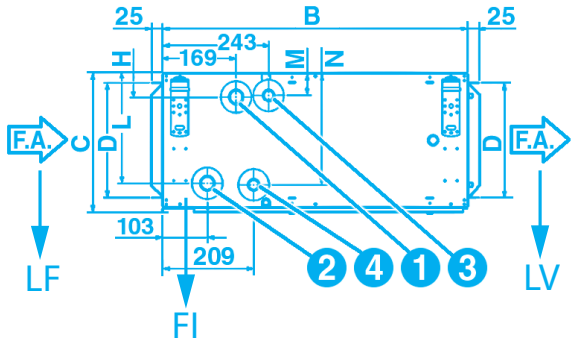

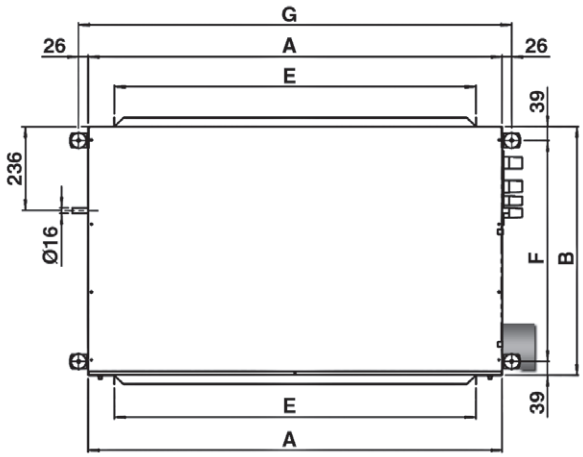

1 = main coil water inlet
2 = main coil water outlet
3 = additional coil water inlet
4 = additional coil water outlet
LV = fan side (outlet)
FI = filter
LF = filter side (inlet)
F.A. = air flow

Standard

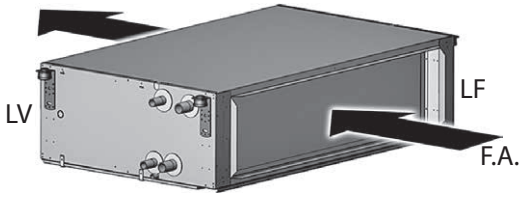

Coil connections on the left looking the air direction

Wiring terminal board

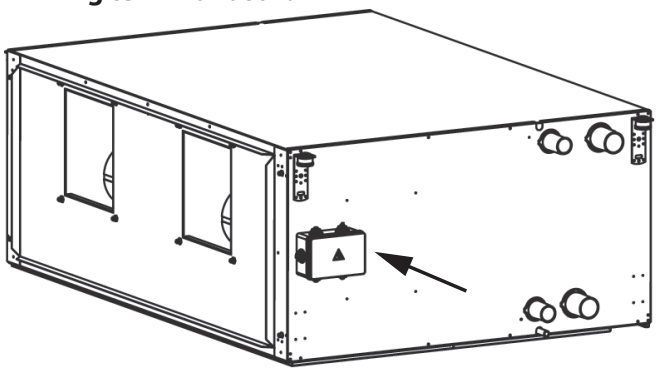

Dimensions

Model		DFCL-ECM 1	DFCL-ECM 2	DFCL-ECM 3	DFCL-ECM 4	DFCL-ECM 5	DFCL-ECM 6
A	mm	1133	1133	1133	1445	1445	1535
B	mm	698	698	698	853	853	1100
C	mm	310	310	360	360	435	488
D	mm	255	255	305	293	368	421
E	mm	991	991	991	1302	1302	1393
F	mm	620	620	620	775	775	1022
G	mm	1185	1185	1185	1497	1497	1587
H	mm	54	54	54	58	58	59
L	mm	245	245	295	291	367	416
M	mm	50	50	50	54	54	55
N	mm	249	249	299	295	370	421

Coil connections

Model	Pos.	1	2	3	4	5	6
Main coil inlet	1	3/4"	1"	1"	1 1/4"	1 1/4"	1 1/4"
Main coil outlet	2	3/4"	1"	1"	1 1/4"	1 1/4"	1 1/4"
Additional coil inlet	3	3/4"	3/4"	3/4"	1"	1"	1"
Additional coil outlet	4	3/4"	3/4"	3/4"	1"	1"	1"

Packed unit

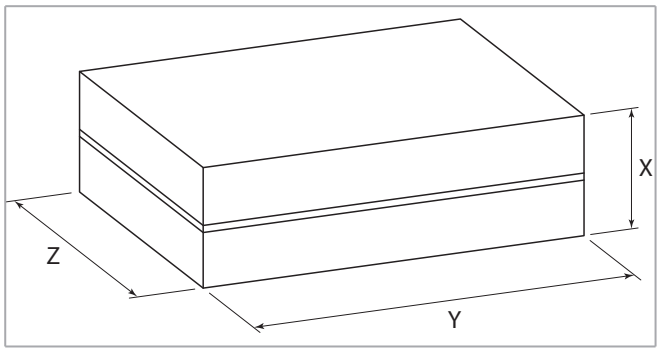

Model		DFCL-ECM 1	DFCL-ECM 2	DFCL-ECM 3	DFCL-ECM 4	DFCL-ECM 5	DFCL-ECM 6
X	mm	330		380		455	505
Y	mm	1290			1605		1695
Z	mm	805			960		1207

Weight

Weight without packaging

Model	DFCL-ECM 1	DFCL-ECM 2	DFCL-ECM 3	DFCL-ECM 4	DFCL-ECM 5	DFCL-ECM 6
3 rows	45	46	54	75	85	-
3+1 rows	48	50	58	80	90	-
3+2 rows	50	52	60	83	94	-
4 rows	47	48	56	78	88	124
4+1 rows	50	51	60	83	94	-
4+2 rows	51	53	62	86	98	134
6 rows	-	-	-	-	-	130
6+2 rows	-	-	-	-	-	140

Weight with packaging

Model	DFCL-ECM 1	DFCL-ECM 2	DFCL-ECM 3	DFCL-ECM 4	DFCL-ECM 5	DFCL-ECM 6
3 rows	48	49	57	79	89	-
3+1 rows	51	53	61	84	94	-
3+2 rows	53	55	63	87	98	-
4 rows	50	51	59	82	92	127
4+1 rows	53	54	63	87	98	-
4+2 rows	54	56	65	90	102	137
6 rows	-	-	-	-	-	133
6+2 rows	-	-	-	-	-	143

Water content

Model	DFCL-ECM 1	DFCL-ECM 2	DFCL-ECM 3	DFCL-ECM 4	DFCL-ECM 5	DFCL-ECM 6
3 rows	2,0	2,9	3,5	4,7	5,7	-
4 rows	2,6	3,7	4,6	6,0	7,1	7,6
6 rows	-	-	-	-	-	11,1
+1 row	0,9	1,1	1,4	2,0	2,7	-
+2 rows	1,5	1,8	2,4	3,2	4,1	4,1

ELECTRONIC WALL CONTROLS

WM-AU

ID	Code
WM-AU	9066632E

The control must always be connected with UPO-AU power unit (to be ordered separately).

Control functions are:
- Manual/automatic 3 speed switch.
- Manual, automatic or centralized Summer/Winter switch.
- Summer/Winter/Fan/Auto mode switch.
- Electronic room thermostat for fan and water valves control (ON-OFF).
- Simultaneous thermostatic control of the valves and fan.
- It allows to control the low temperature cut-out thermostat NTC.
- Energy saving function.

Control power absorption: see the UPO-AU power unit

Dimensions: 135x86x24 mm

T-MB2 SW

ID	Code
T-MB2 SW	9066994ESW

The control must always be connected with UPO-AU power unit (separately delivered).
Control with TFT 2,4" coloured graphic display for wall installation.
The main characteristics are:
- Management by keyboard
- Management of one single unit or of several units in Master/Slave mode
- ON/OFF switch
- Operation mode setting
- Setpoint configuration or setpoint variation by supervisory program (+/- 3°C of the set)
- Room temperature internal sensor, which can be defined as a priority compared to the return air sensor on the fan coil
- Fan speed switch
- Advanced daily/weekly ON/OFF programming with 3 pre-settable weekly programs
- Viewing and change of the operating mode parameters of the unit, alarm notification and information related to the unit
- Electric coil control
- Activation/deactivation of the room temperature display
- Possibility to use the T1 sensor which allows the return air control (fitted on the power unit)

Control power absorption: see the UPO-AU power unit

Dimensions: 115x75x20 mm

UPO-AU - Power unit for WM-AU and T-MB2 SW remote controls

FITTED		NOT FITTED	
ID	Code	ID	Code
UPOM1-AU	9034170	UPO1-AU	9034169

Power unit to be installed on the end unit (fan coil interface).

- It controls the fan and the valves of the fan coil.
- It is connected to the electric supply.
- It receives the information required from the remote control.
- Possibility to use the LTCO low temperature cut-out thermostat (optional) for the air probe function which allows the return air control.
- Possibility to use the LTCO low temperature cut-out thermostat (optional) for the T2 function which controls the summer/winter switch.
- Possibility to use the low temperature cut-out thermostat (optional) for the T3 function as low temperature cut-out thermostat.
- It allows to control up to 10 units (1 master and 9 slaves).
- Max. Network length: 100 meters
- Max cable length between control and first connected power unit: 20 meters

Control power absorption: 2,3 VA

Wall electronic controls accessories

NTC low temperature cut-out thermostat

ID	Code
NTC	3021090

To be fitted between the coil fins.
When connecting the control, the NTC probe cable must be separated from the power supply wires.
To be used only with WM-TQR control and the UPO-AU power-unit.
It stops the fan when the water temperature is lower than 28 °C and it starts the fan when is higher than 33 °C.

To use as:

- Probe function for the return air control.
- T2 function which controls the summer/winter switch (change-over).
- T3 function as low temperature cut-out thermostat.

T2 accessory

ID	Code
T2	9025310

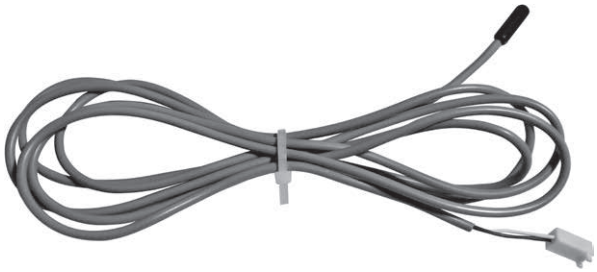

T2 probe, to be placed on the water supply pipe upstream 3 way valves (not to be used with 2 way valves).
The T2 probe must be used as described below:

- Change-Over for the automatic switch of the operating mode. If water temperature is lower than 20 °C, cooling mode is set; on the other hand, if water temperature exceeds 30 °C, heating mode is set.

To be used with UPO-AU power-unit.

CONTROLS AND UNITS MB VERSION

Controls and units MB version

All the **DFCL / DFCL-ECM** units can be supplied with a wide range of controls, which allows managing one single unit or several units by using the Modbus RTU - RS 485.
The groups of units can be managed according to the Master/Slave logic (up to 20 units) or by supervisory components.
The system consists in a **QCV-MB** board with **T-MB2 SW** included wall control and a series of controls, such as the **PSM-DI** multifunction control and the **NET** supervisory program.

To be used with valves with 3 points - 24 Volt actuator or with ON/OFF 230 V valves.

QCV-MB2 control board

It can be used with 24V - 3 points valve or 230 V ON-OFF valves.

DFCL

Model	FITTED		NOT FITTED	
	ID	Code	ID	Code
1-2-3-4-5-6	QCV-MB2-M 1-6	9034521	QCV-MB2-S 1-6	9034511
7	QCV-MB2-M 7	9034527	QCV-MB2-S 7	9034517

DFCL-ECM

FITTED		NOT FITTED	
ID	Code	ID	Code
QCV-MB2-M 1-6	9034521	QCV-MB2-S 1-6	9034511

The **QCV-MB** electronic board is set to carry out different functions and adjustment modes, in order to meet the installation requirements. These modes are selected by setting the configuration dip switches on the board.

- 2/4 pipe system.
- Electronic room thermostat or automatic fan speed modulation for fan control (On-OFF).
- Valve thermostatic control and continuous ventilation.
- Valve and simultaneous ventilation thermostatic control.
- Fan operation control depending on the coil temperature (T3 probe fitted), which can be activated only in heating mode or heating and cooling mode.
- Automatic switch of the operating mode by means of T2 water probe (optional) applied on the 2 pipe system.
- Seasonal switch by means of remote contact.
- ON/OFF of the fan coil by means of the remote contact (window or clock contact).
- Electric heater control.

By activating the T3 probe function, the fan is stopped in winter when the coil temperature is lower than 32 °C and started when the temperature reaches 36 °C. In summer mode, the fan stops when the temperature inside the coil exceeds 22 °C and starts when it drops below 18 °C.

The following connections are located on the power board:

- **T-MB2 SW** wall control.
- RS 485 serial connection to manage several fan coils in Master/Slave configuration or to create a supervisory network.

T-MB2 SW wall control

Included with the QCV-MB control panel.

Control with TFT 2,4" coloured graphic display for wall installation.
The main characteristics are:

- Management by keyboard
- Management of one single unit or of several units in Master/Slave mode
- ON/OFF switch
- Operation mode setting
- Setpoint configuration or setpoint variation by supervisory program (+/- 3°C of the set)
- Room temperature internal sensor, which can be defined as a priority compared to the return air sensor on the fan coil
- Fan speed switch
- Advanced daily/weekly ON/OFF programming with 3 pre-settable weekly programs
- Viewing and change of the operating mode parameters of the unit, alarm notification and information related to the unit
- Electric coil control
- Activation/deactivation of the room temperature display
- Possibility to use the T1 sensor which allows the return air control (fitted on the power unit)

Dimensions: 115x75x20 mm

Connection with T-MB2 SW wall control

A group of **DFCL / DFCL-ECM** units with **QCV-MB** control board can be connected via a serial link and can consequently be managed at the same time by just one **T-MB2 SW** wall control.

Using the special jumper present on the MB board, one unit must be configured as the master, and all the others as slaves.

One control for each unit
(Maximum length of the connection cable = 20 m)

One control for more units (20 units max.)
(Maximum total length of the connection cable = 800 m)

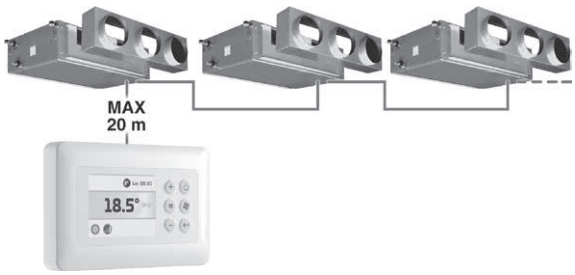

T2 accessory for units with QCV-MB control board

ID	Code
T2	9025310

The T2 probe can be combined with MB boards to be placed on the water supply pipe upstream 3 way valves (not to be used with 2 way valve).

The T2 probe must be used as described below:

- Change-Over for 2 pipe systems, for the automatic switch of the operating mode. If water temperature is lower than 20 °C, cooling mode is set; on the other hand, if water temperature exceeds 30 °C, heating mode is set
- it can be used on units with electric heater and hot water supply. The T2 priority probe activates the electric heater or water valve, depending on the water temperature detected. If water temperature exceeds 34 °C, the water valve ON-OFF control is activated; on the other hand, if water temperature is lower than 30 °C, the electric heater is activated

PSM-DI multifunction control panel

Multifunction control (to be used with QCV-MB control board only).

ID	Code
PSM-DI	3021293

Another option available for the serial communication between the units is the possibility to connect up to 60 DFCL / DFCL-ECM units in series and manage them with just one multifunction control panel. The wall mounted controller can be used to set the operating mode for each individual unit connected, display the operating conditions of each individual unit, and set the ON/OFF time sets for each day of the week (the program can be set for all the units and for a maximum of ten groups of units).
If more than 60 units need to be connected, two or more control panels must be used.
Each unit must have a MB board.
The PSM-DI control is used to manage a series of fan coils, up to a maximum of 60 units (the maximum length of the RS 485 connection cable must not exceed 800 m), from one single control point.

The PSM-DI control communicates via a serial line with all the units connected, with the possibility of controlling them all together or individually. In fact, the unique address of each individual fan coil means that all the units can be called at the same time, or the individual unit called, to perform the following functions:

- display the current operating mode, the fan speed, the set point
- display the room temperature measured on the individual unit
- turn all the units ON and OFF at the same time or alternatively each unit individually
- change the operating mode (fan only, heating, cooling, automatic change-over)
- change the set point and modify the values and operation parameters of the fan speed

Each function can then be sent to all the units connected, or alternatively to each individual unit.

Different set points or operating modes can be set for each individual unit.

The PSM-DI panel can also be used for the time management of the units over the week. Four ON times and four OFF times can be set on the units for each day of the week. A different temperature set that will be considered as Operation set for all connected appliances, can be set for each event. If the temperature set is not entered for the individual event, it must be set during programming for each individual unit or for the entire network.

The PSM-DI panel cannot be used together with the NET management program.

Notes:

- *set the Dip Switches of each fan coil as illustrated in the installation manual, based on the required solutions*
- *only one SIOS board is allowed to be used per each PSM-DI control panel*
- *about "Priority pump function": when just one unit calls for, the relay RL1 on the SIOS board is automatically activated to connect a hot water pump*
- *the RS 485 network's overall length must not exceed 700/800 metres*

T-DI Touch screen multifunction control panel

ID	Code
T-DI	9066685

T-DI Touch screen multifunction control panel

The T-DI multifunction control panel lets supervise and control more units with MB or SIOS boards; the panel is equipped with a 7 inches touch screen display and a serie of graphical pages that allows an easy reading of the data sent by the fan coils and the management of up to 60 units (max. 60 units: SIOS + MB).
With the T-DI multifunction control panel it is also possible to control the units at a distance with the specific Cloud App for Android and iOS.
The Cloud application is simple to use and lets have complete control of all the connected units.

Web gateway for Cloud

Code	ID
9066892	Web gateway

Web gateway for Cloud

With the Web gateway for "Cloud" it is possible to control at a distance up to 60 units, equipped with MB or SIOS boards (max. 60 units: SIOS + MB), with the specific APP for Android and iOS.
The "Cloud" APP is simple to use and lets have complete control of all the connected units.

NET SOFTWARE

NET program for managing a network of MB fan coils

Hardware/software supervisory system (to be used with QCV-MB control board only).

ID	Code
NET	9079118

NET is a centralised control system for networks of MB fan coils, based on software that runs on LINUX™ operating system (the program is provided pre-installed on a PC) and it works in a "stand alone" way, as an ordinary computer, so that it can be connected to a monitor, to a mouse and to a keyboard. By connecting an Ethernet cable is instead possible to work at a distance and visualize the entire program setting-up through whatever browsers. The **NET** software offers a practical and economical solution for managing the units, with the simple click of the mouse.

The main characteristics are:
- simplicity of use
- an extremely complete and functional weekly program
- possibility to access the historical operating data for each individual unit connected
- possibility of data saving on USB key
- visualization of the saved configuration on a new ASUS PC

The program takes advantage from all features of our units with MB fitted board.

The program can be used to:
- create uniform groups (groups of units on individual floors, in offices or rooms)
- save weekly programs configured for different types of operation (summer, winter, mid seasons, closing periods etc.); these can then be recalled and activated with a simple click of the mouse. Weekly on/off cycles can be set for individual units or groups of units
- set the operating conditions for each individual unit or groups of units (operating mode, fan speed, temperature setting)
- set the set point limits for each individual unit or groups of units
- switch each individual unit or groups of units ON or OFF

Graphical pages

The main program screen can display and interact with the entire network of units.

An individual unit, a group of units or the entire network can be called so as to make modifications to the operating mode and the set point.

The user can then check the operating status of each individual unit, read the room temperature, the coil temperature and the operating status of the condensate drain pump or any alarms.

The **"Monitoring"** Screen shows the units that are connected to the network and scanned by the program.

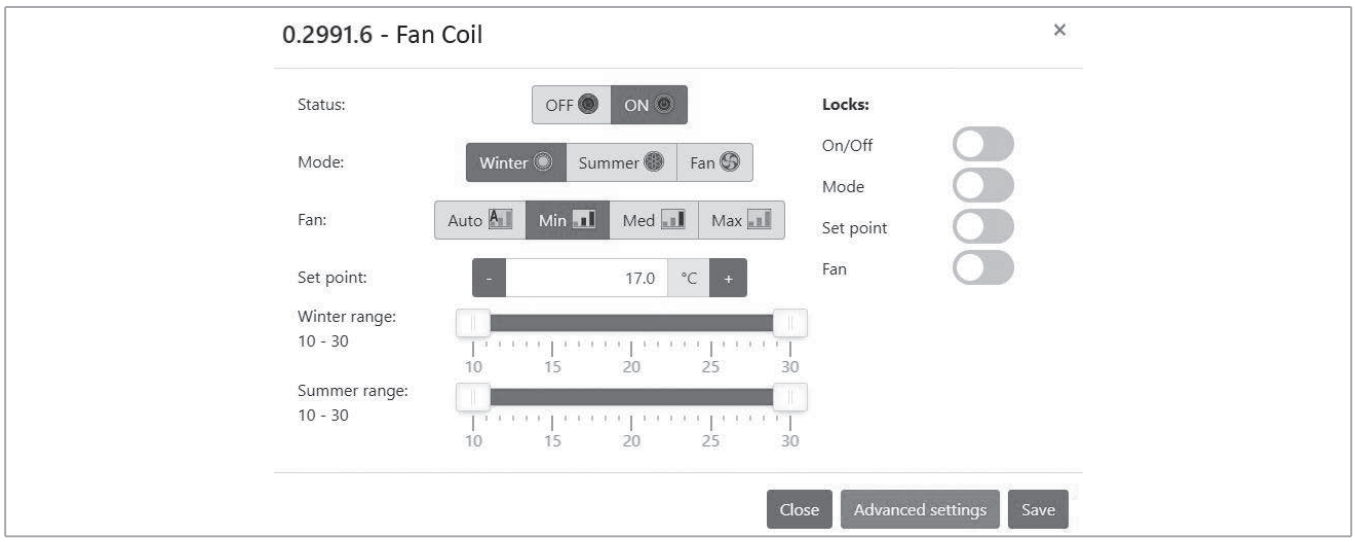

The icon of the terminal unit provides the following information:

- unit name (0.2766.8)
- set temperature (SETP)
- room temperature (AT)
- unit status:

ON (GREEN)

OFF (RED)

- mode:

Summer

Winter

Auto

Fan only

- fan speed:

Low

Medium

High

Auto Fan

The **"Programs"** Screen, can be used to set the unit operating parameters for each day of the week. Several weekly programs can be set.
Time bands are available for each day of the week. The time and the type of operation to be performed by the unit can be set for each band.
The time and the operating parameters can then be displayed before being sent to the unit and implemented.

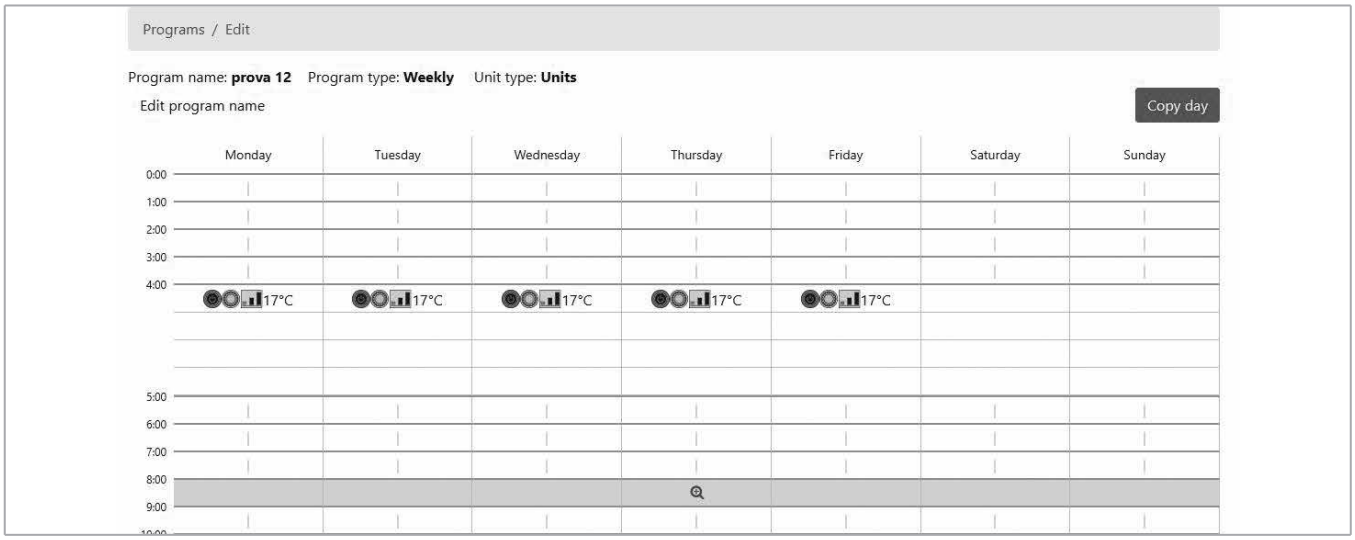

Every time that the reading of the set up Dip Switches results not easy (as for example by the false ceiling installations), it is always possible to display them directly through the NET program.

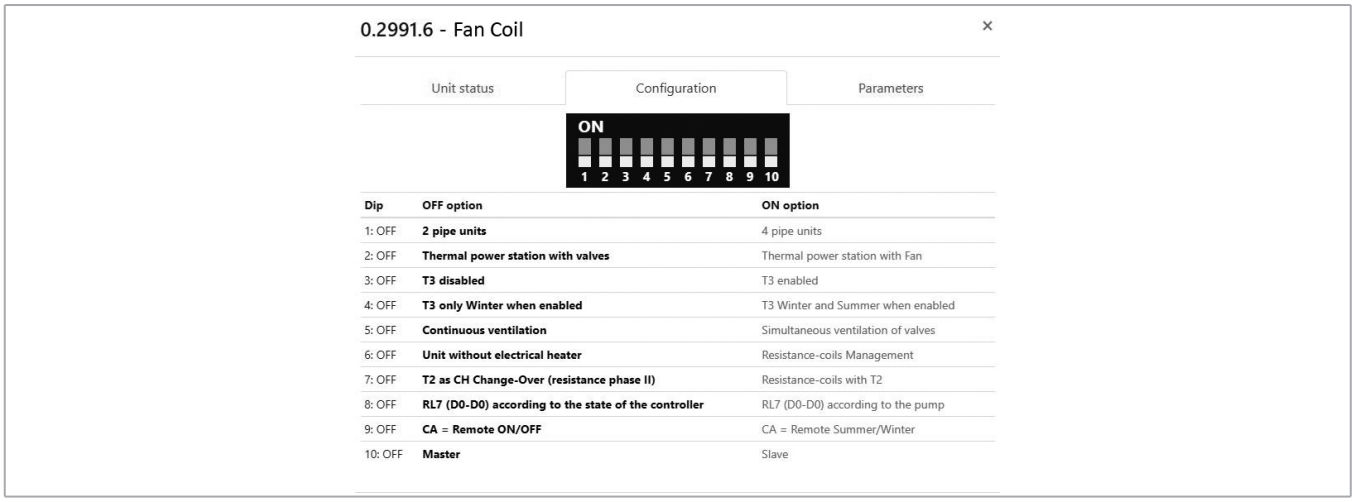

Dip	OFF option	ON option
1: OFF	**2 pipe units**	4 pipe units
2: OFF	**Thermal power station with valves**	Thermal power station with Fan
3: OFF	**T3 disabled**	T3 enabled
4: OFF	**T3 only Winter when enabled**	T3 Winter and Summer when enabled
5: OFF	**Continuous ventilation**	Simultaneous ventilation of valves
6: OFF	**Unit without electrical heater**	Resistance-coils Management
7: OFF	**T2 as CH Change-Over (resistance phase II)**	Resistance-coils with T2
8: OFF	**RL7 (D0-D0) according to the state of the controller**	RL7 (D0-D0) according to the pump
9: OFF	**CA = Remote ON/OFF**	CA = Remote Summer/Winter
10: OFF	**Master**	Slave

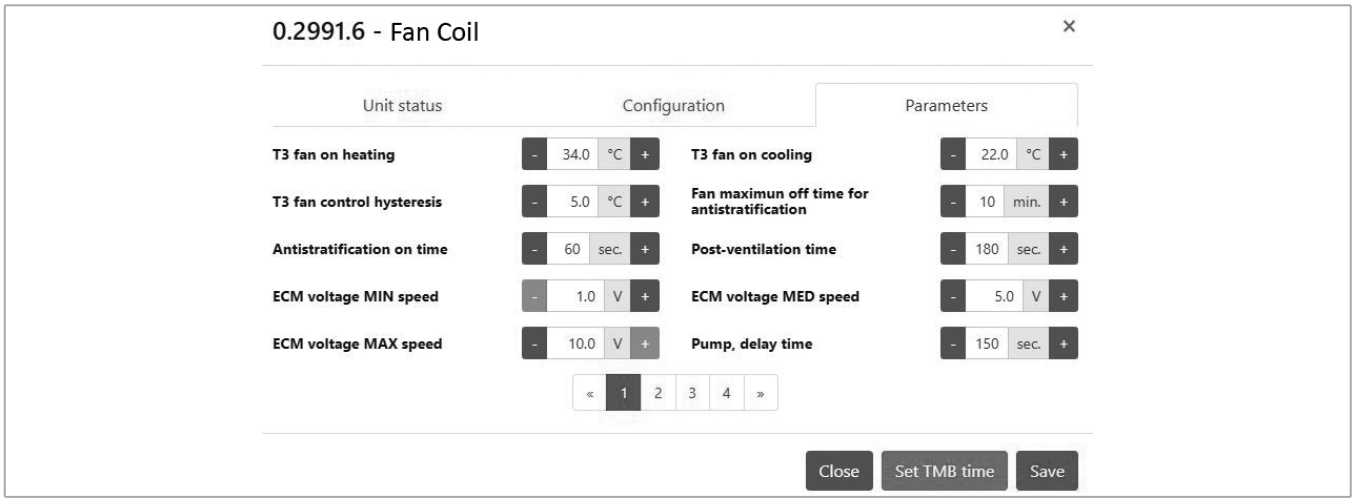

In addition to the alarm set on the **"Alarms"** Screen, it is possible to send the ON-OFF alarm notification via E-mail and sms.

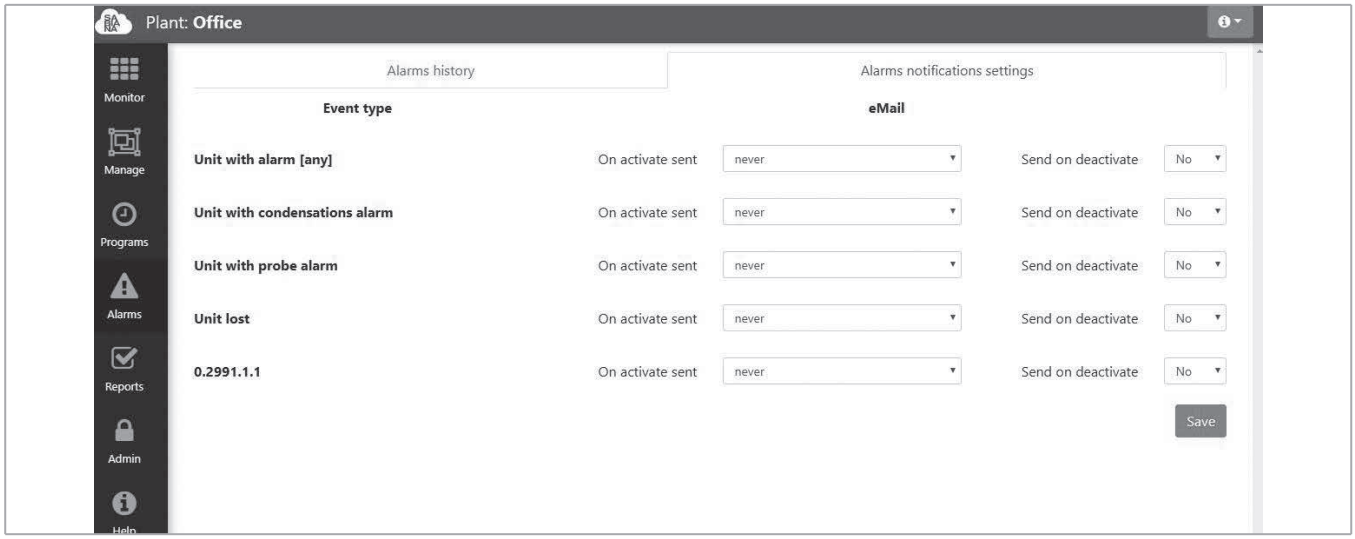

RS 485 serial connection cable

Shielded cable to be used : 9841, RS-485, 1x2x24 AWG SFTP, 120 Ohm.

PC NET Software

Connection of a DFCL / DFCL-ECM network with QCV-MB2 control board.

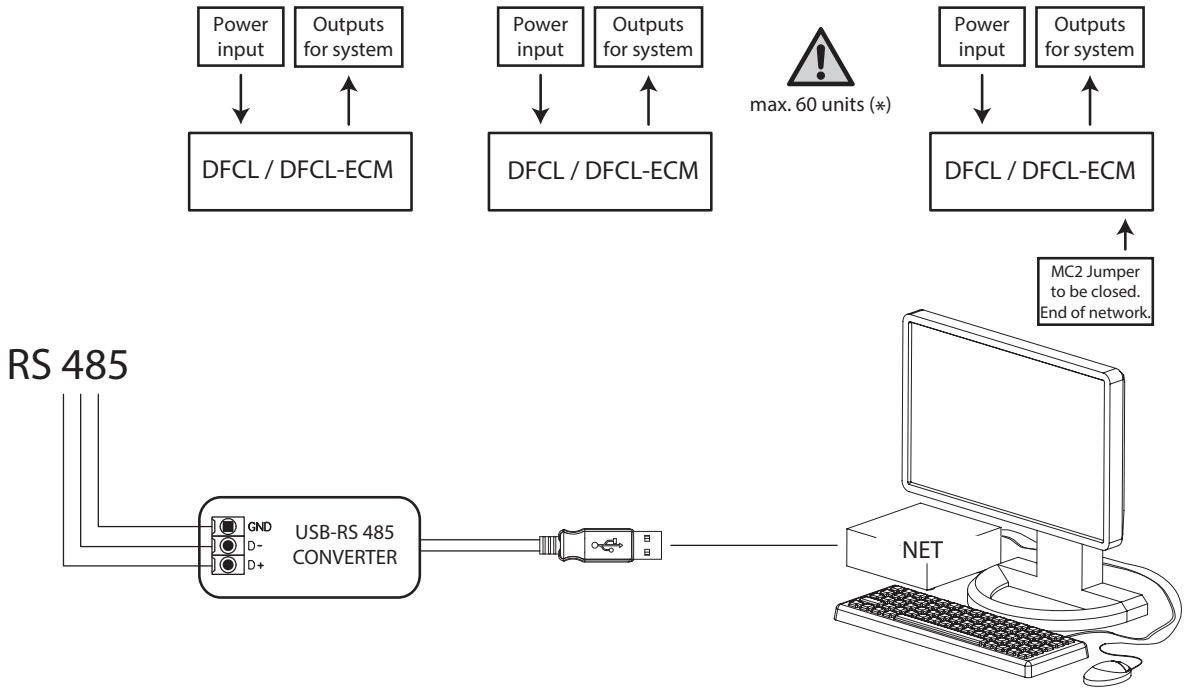

(*) In the event of more than 60 units, add one or more Router-S (see next page).

PSM-DI and NET accessories

SIOS

ID	Code
SIOS	3021292

IO board

The SIOS is a board equipped with 8 relays with potential free contact to control the activation or deactivation of remote electric utilities. Moreover, the board has 8 digital inlets to display the actuators or external consents, such as motor or other.

The SIOS boards can be connected:
- inside a network managed by NET
- inside a network managed by T-DI
- inside a network managed by Web gateway
- to a PSM-DI panel (one SIOS for each PSM-DI panel)

Router-S

ID	Code
Router-S	3021290

Router for NET (default) or for BMS Systems not supplied.

The Router-S is an electronic board that allows to control several units inside a network managed by NET(default) or within a sub-network managed by BMS systems, that are not provided (it is necessary to operate on a Dip Switch on the board).

Managed by NET

The Router-S in the standard version is an electronic board that:
- allows creating networks with more than 60 units (minimum 2 Router-S are required) or to divide the network (per floor, building, ecc.).
- allows creating a Master/Slave sub-network to be controlled as an indipendent group

The number of Router-S to be used is:
- up to 60 units: no Router-S
- from 61 to 120 units: 2 Router-S
- every 60 subsequent units: 1 additional Router-S

Managed by BMS systems which are not provided

The Router-S becomes an electronic board to use with BMS systems not supplied, only after having set the Dip Switch on the board and so creating a Master/Slave sub-network to be controlled as an indipendent group.

The number of Router-S to be used is:
- max 14 Router-S
- max. 15 units for each Router-S

OPTIONAL ACCESSORIES

BCM external auxiliary condensate collection tray

Model	Code
All	9034029

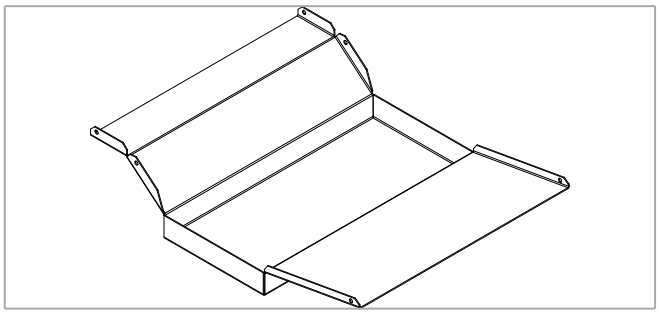

SFM G4 synthetic filter ePM10 50% class

The filter is a washable synthetic fibre, flame-proof according to Class F1 DIN 53438. Compliant with: EN 16890. The filter is supplied as an accessory and must be fitted on the unit on site in place of the standard filter.

DFCL

Model	ID	Code	A mm	B mm	C mm
1-2	SFM 1-2	6034050	48	285	1000
3	SFM 3	6034052	48	335	988
4	SFM 4	6034053	48	335	1298
5	SFM 5	6034054	48	410	1298
6	SFM 6	6034056	48	460	1385
7	SFM 7	6034057	48	560	1385

DFCL-ECM

Model	ID	Code	A mm	B mm	C mm
1-2	SFM 1-2	6034050	48	285	1000
3	SFM 3	6034052	48	335	988
4	SFM 4	6034053	48	335	1298
5	SFM 5	6034054	48	410	1298
6	SFM 6	6034056	48	460	1385

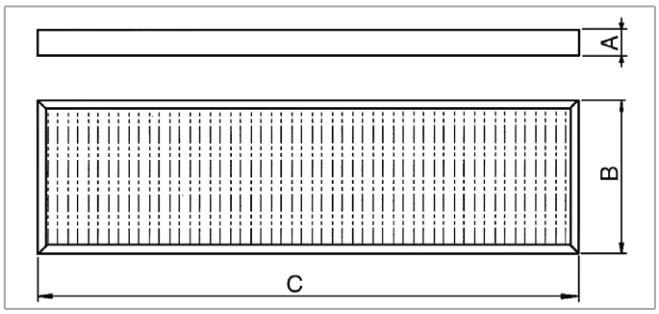

SFM F6 synthetic filter ePM10 70% class

High efficiency compact filter in glass microfiber paper, Compliant with: EN 16890. The filter is supplied as an accessory and must be fitted on the unit on site in place of the standard filter.

DFCL

Model	ID	Code	A mm	B mm	C mm
6	SFM-F6 6	6034197	98	460	1385
7	SFM-F6 7	6034198	98	560	1385

DFCL-ECM

Model	ID	Code	A mm	B mm	C mm
6	SFM-F6 6	6034197	98	460	1385

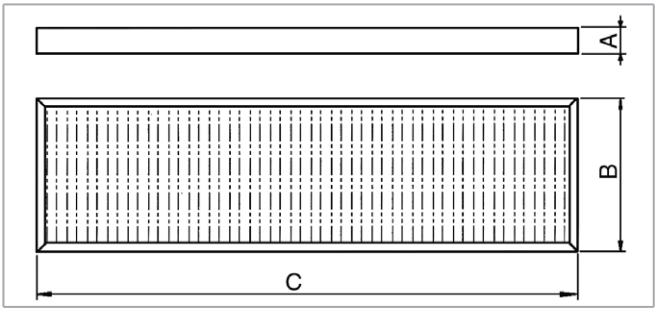

PMM intake/supply spigot plenum

Intake/supply spigot plenum with 3 spigots (Sizes 1-2-3) or 4 spigots (Sizes 4-5-6-7).

DFCL

Model	ID	Code	A mm	B mm	C mm	Spigots number	Ø spigots mm
1-2	PMM 1-2	9034200	1133	182	298	3	250
3	PMM 3	9034220	1133	182	348	3	250
4	PMM 4	9034230	1445	300	348	4	250
5	PMM 5	9034240	1445	300	442	4	300
6	PMM 6	9034280	1535	300	472	4	355
7	PMM 7	9034290	1535	300	572	4	355

DFCL-ECM

Model	ID	Code	A mm	B mm	C mm	Spigots number	Ø spigots mm
1-2	PMM 1-2	9034200	1133	182	298	3	250
3	PMM 3	9034220	1133	182	348	3	250
4	PMM 4	9034230	1445	300	348	4	250
5	PMM 5	9034240	1445	300	442	4	300
6	PMM 6	9034280	1535	300	472	4	355

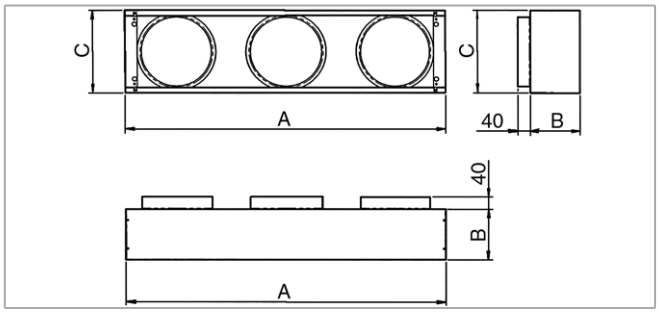

GAV antivibrating connection

Intake/supply antivibrating connection, made of two galvanized frames and a PVC flexible connection.

DFCL

Model	ID	Code	A mm	B mm
1-2	GAV 1-2	6034200	1138	296
3	GAV 3	6034201	1138	346
4	GAV 4	6034202	1450	346
5	GAV 5	6034203	1450	421
6	GAV 6	6034204	1540	461
7	GAV 7	6034205	1540	561

DFCL-ECM

Model	ID	Code	A mm	B mm
1-2	GAV 1-2	6034200	1138	296
3	GAV 3	6034201	1138	346
4	GAV 4	6034202	1450	346
5	GAV 5	6034203	1450	421
6	GAV 6	6034204	1540	461

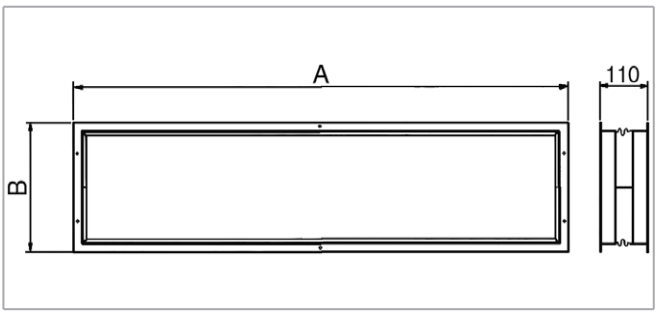

BEM electric heater

The BEM electric coil consists of electric resistances and a security thermostat, which are inside a galvanized steel and insulated casing.

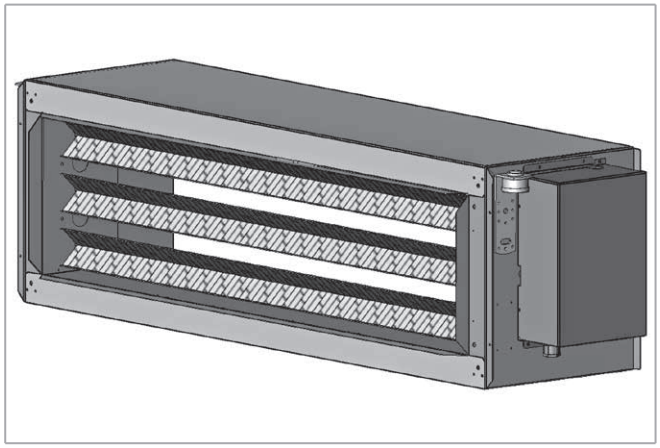

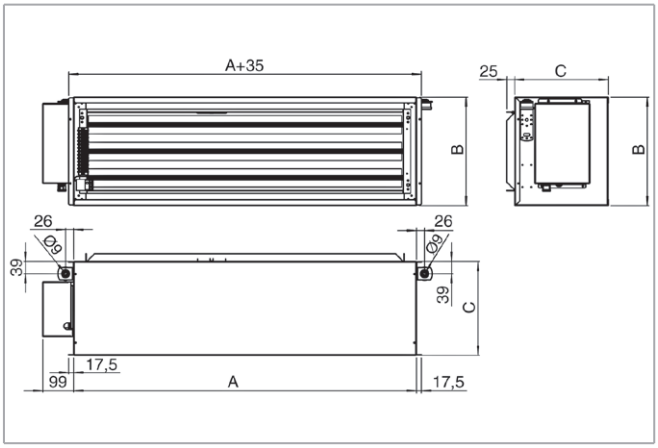

DFCL

Model	ID	Code	Motor voltage	A	B	C	Electric heater - 1° stage	Nominal installed power
			V	mm	mm	mm	kW	W
1	BEM-230 1	9034201	230	1098	297	300	2000	3000
1	BEM-400 1	9034202	400	1098	297	300	2000	3000
2	BEM-230 2	9034210	230	1098	297	300	3000	4500
2	BEM-400 2	9034211	400	1098	297	300	3000	4500
3	BEM-400 3	9034222	400	1098	347	300	5000	7500
4	BEM-400 4	9034232	400	1410	347	300	5000	7500
5	BEM-400 5	9034242	400	1410	422	300	7500	15000
6	BEM-400 6	9034204	400	1500	472	300	7500	15000
7	BEM-400 7	9034205	400	1500	572	300	7500	15000

DFCL-ECM

Model	ID	Code	Motor voltage	A	B	C	Electric heater - 1° stage	Nominal installed power
			V	mm	mm	mm	kW	W
1	BEM-230 1	9034201	230	1098	297	300	2000	3000
1	BEM-400 1	9034202	400	1098	297	300	2000	3000
2	BEM-230 2	9034210	230	1098	297	300	3000	4500
2	BEM-400 2	9034211	400	1098	297	300	3000	4500
3	BEM-400 3	9034222	400	1098	347	300	5000	7500
4	BEM-400 4	9034232	400	1410	347	300	5000	7500
5	BEM-400 5	9034242	400	1410	422	300	7500	15000
6	BEM-400 6	9034204	400	1500	472	300	7500	15000

Electronic wall controls for BEM electric heater (optional)

For **DFCL** models:

WM-TQR 3 speed control with electronic thermostat and centralized/manual summer/winter switch

WM-AU Automatic speed control with electronic thermostat and summer/winter switch (to be used with UPO-AU only)

T-MB2 SW T-MB2 SW wall control (to be used with UPO-AU only)

For **DFCL-ECM** models:

WM-AU Automatic speed control with electronic thermostat and summer/winter switch (to be used with UPO-AU only)

T-MB2 SW T-MB2 SW wall control (to be used with UPO-AU only)

For more details about the controls, see the related pages within this document.

24 V main coil kit valve - to be used only with QCV-MB2 control board

1" valve with 3 points - 24 Volt actuator.
The valves can't be used with WM-T and WM-TQR controls.

DFCL

Model	ID	Code	H mm	L mm	Valve connection	Kvs m^3/h
1	V0-24-A	9035145C	54	245	3/4"	6,3
2	V0-24-B	9035146C	54	245	1"	6,3
3	V0-24-B	9035146C	54	295	1"	6,3
4	V0-24-C	9035147C	58	291	1 1/4"	10
5	V0-24-C	9035147C	58	367	1 1/4"	10
6	V0-24-E	9035149C	59	416	1 1/4"	10
7	V0-24-E	9035149C	59	516	1 1/4"	10

DFCL-ECM

Model	ID	Code	H mm	L mm	Valve connection Ø	Kvs m^3/h
1	V0-24-A	9035145C	54	245	3/4"	6,3
2	V0-24-B	9035146C	54	245	1"	6,3
3	V0-24-B	9035146C	54	295	1"	6,3
4	V0-24-C	9035147C	58	291	1 1/4"	10,0
5	V0-24-C	9035147C	58	367	1 1/4"	10,0
6	V0-24-E	9035149C	59	416	1 1/4"	10,0

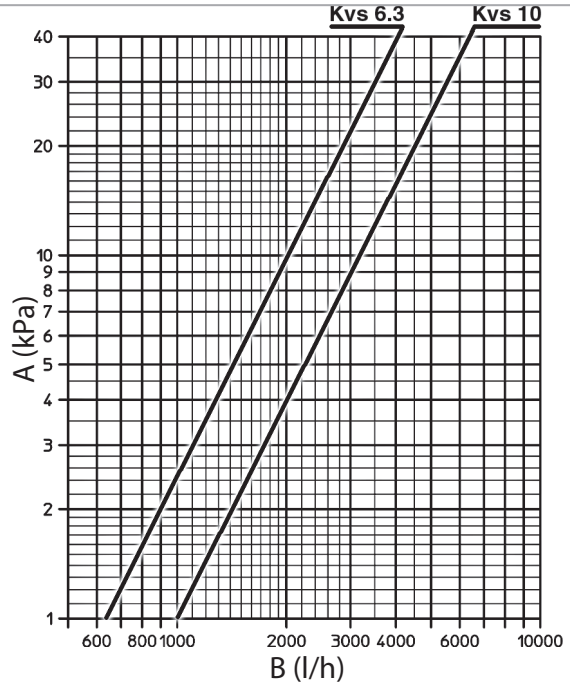

A Pressure drop
B Water flow rate

Left configuration (standard)

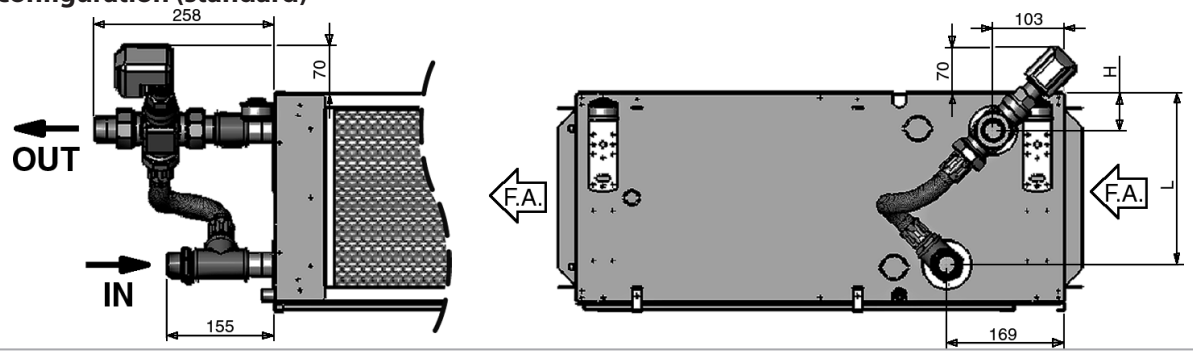

Right configuration (on demand)

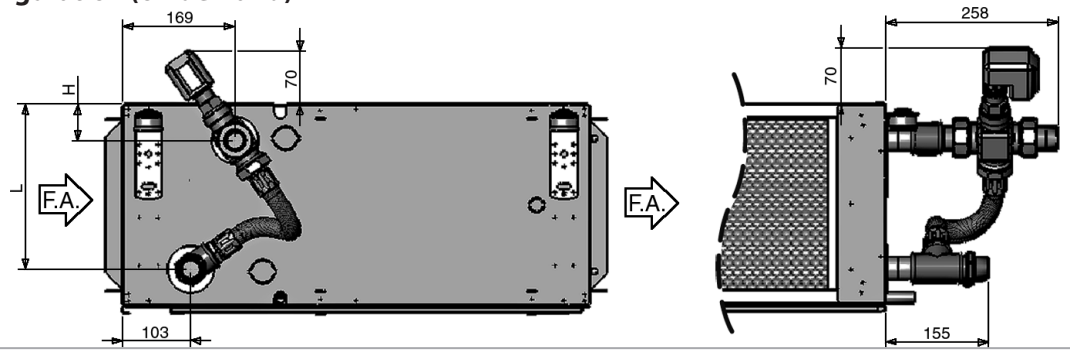

24 V auxiliary coil kit valve - to be used only with QCV-MB2 control board

1" valve with 3 points - 24 Volt actuator.
The valves can't be used with WM-T and WM-TQR controls.

DFCL

Model	ID	Code	M	N	Valve connection	Kvs
			mm	mm	Ø	m³/h
1-2	VO-24-A	9035145C	50	249	3/4"	6,3
3	VO-24-A	9035145C	50	299	3/4"	6,3
4	VO-24-D	9035148C	54	295	1"	10
5	VO-24-D	9035148C	54	370	1"	10
6	VO-24-F	9035144C	55	421	1"	10
7	VO-24-F	9035144C	55	521	1"	10

DFCL-ECM

Model	ID	Code	M	N	Valve connection	Kvs
			mm	mm	Ø	m³/h
1-2	VO-24-A	9035145C	50	249	3/4"	6,3
3	VO-24-A	9035145C	50	299	3/4"	6,3
4	VO-24-D	9035148C	54	295	1"	10,0
5	VO-24-D	9035148C	54	370	1"	10,0
6	VO-24-F	9035144C	55	421	1"	10,0

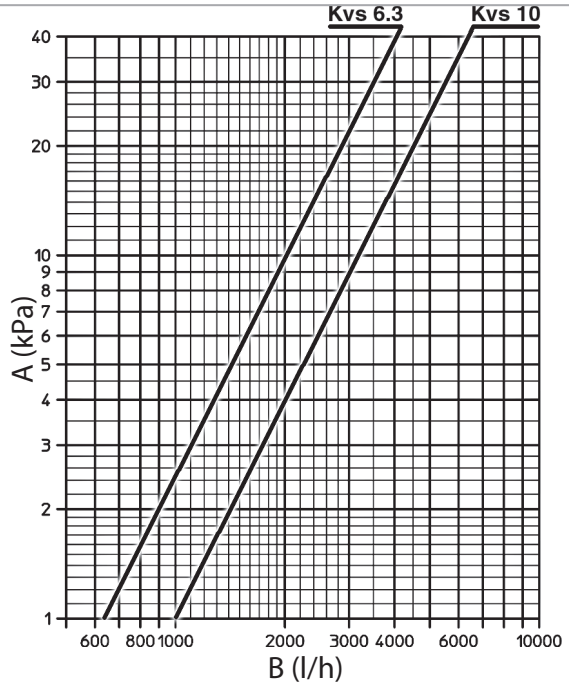

A Pressure drop
B Water flow rate

Left configuration (standard)

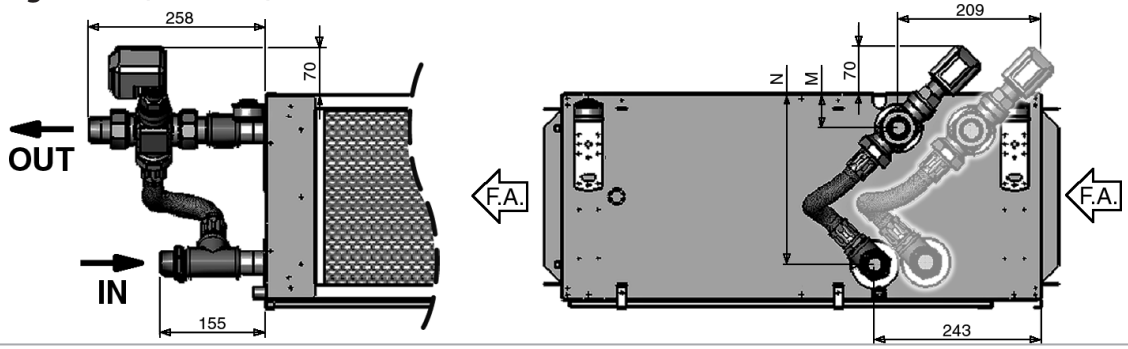

Right configuration (on demand)

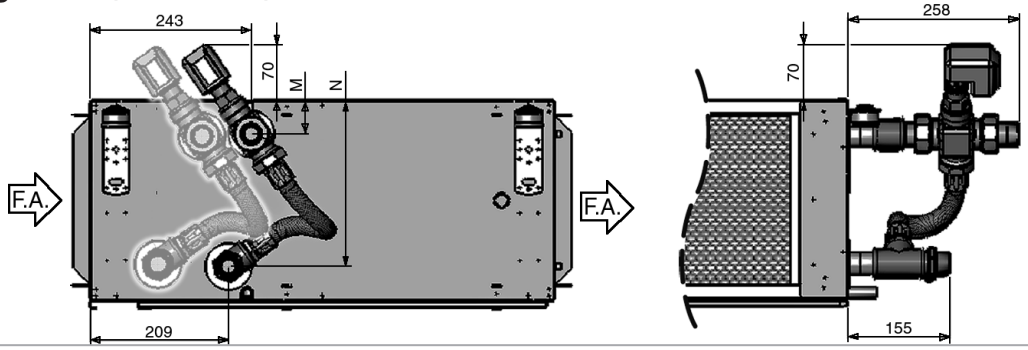

230 V main coil kit valve - to be used only with ON/OFF 230 V controls (QCV-MB2, WM-T, WM-TQR, WM-AU and T-MB2 SW)

DFCL

Model	ID	Code	H	L	Valve connection	Kvs
			mm	mm	Ø	m^3/h
1	V0-230-A	9035145	54	245	3/4"	6,3
2	V0-230-B	9035146	54	245	1"	6,3
3	V0-230-B	9035146	54	295	1"	6,3
4	V0-230-C	9035147	58	291	1 1/4"	10
5	V0-230-C	9035147	58	367	1 1/4"	10
6	V0-230-E	9035149	59	416	1 1/4"	10
7	V0-230-E	9035149	59	516	1 1/4"	10

DFCL-ECM

Model	ID	Code	H	L	Valve connection	Kvs
			mm	mm	Ø	m^3/h
1	V0-230-A	9035145	54	245	3/4"	6,3
2	V0-230-B	9035146	54	245	1"	6,3
3	V0-230-B	9035146	54	295	1"	6,3
4	V0-230-C	9035147	58	291	1 1/4"	10,0
5	V0-230-C	9035147	58	367	1 1/4"	10,0
6	V0-230-E	9035149	59	416	1 1/4"	10,0

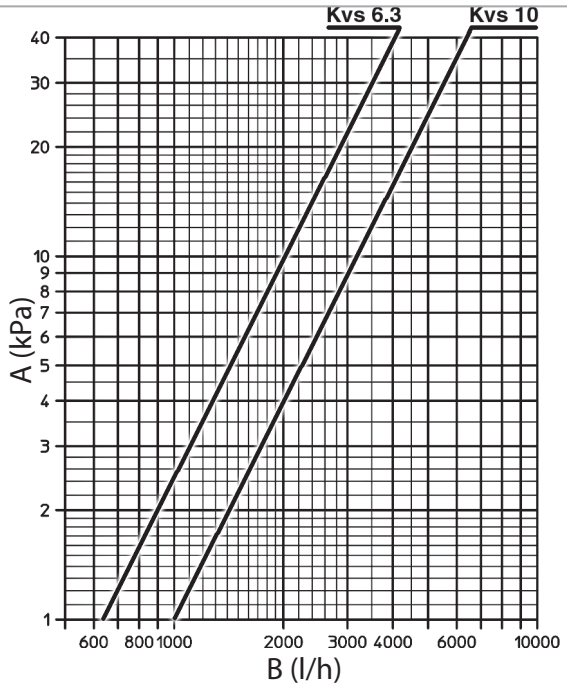

A Pressure drop
B Water flow rate

Left configuration (standard)

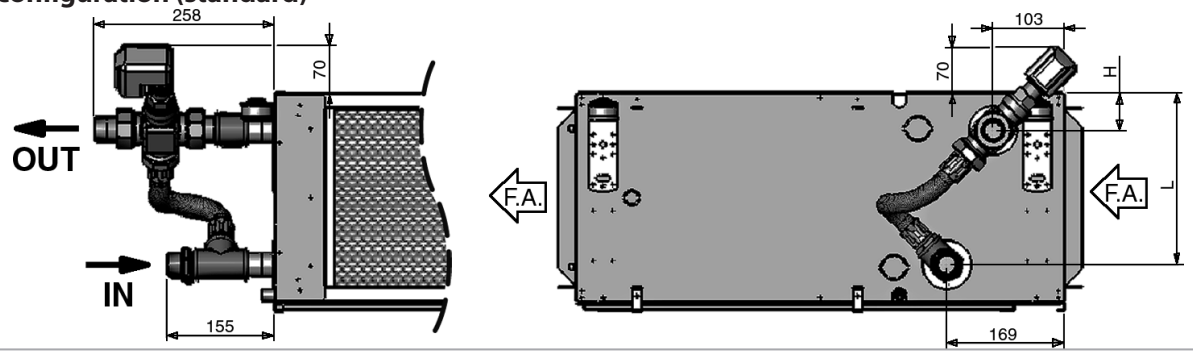

Right configuration (on demand)

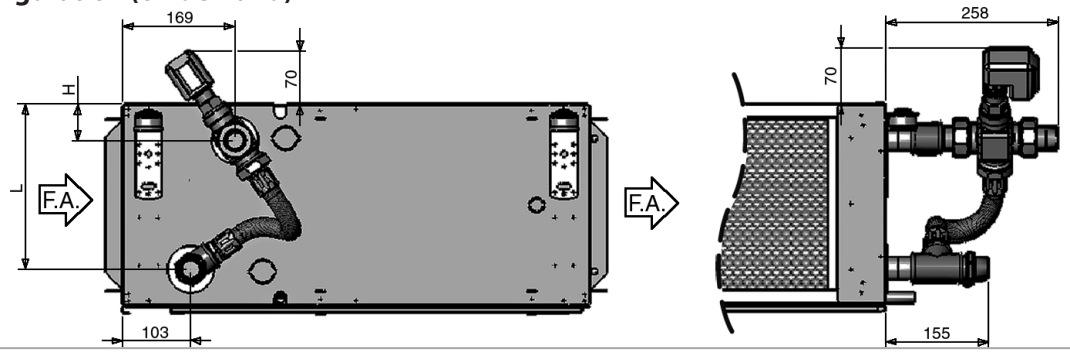

230 V auxiliary coil kit valve - to be used only with ON/OFF 230 V controls (QCV-MB2, WM-T, WM-TQR, WM-AU and T-MB2 SW)

DFCL

Model	ID	Code	M	N	Valve connection	Kvs
			mm	mm	Ø	m^3/h
1-2	VO-230-A	9035145	50	249	3/4"	6,3
3	VO-230-A	9035145	50	299	3/4"	6,3
4	VO-230-D	9035148	54	295	1"	10
5	VO-230-D	9035148	54	370	1"	10
6	VO-230-F	9035144	55	421	1"	10
7	VO-230-F	9035144	55	521	1"	10

DFCL-ECM

Model	ID	Code	M	N	Valve connection	Kvs
			mm	mm	Ø	m^3/h
1-2	VO-230-A	9035145	50	249	3/4"	6,3
3	VO-230-A	9035145	50	299	3/4"	6,3
4	VO-230-D	9035148	54	295	1	10
5	VO-230-D	9035148	54	370	1	10
6	VO-230-F	9035144	55	421	1	10

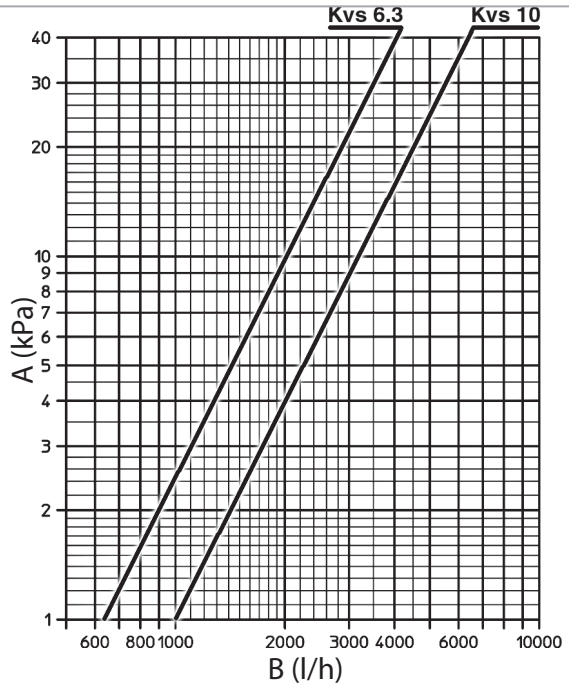

A Pressure drop
B Water flow rate

Left configuration (standard)

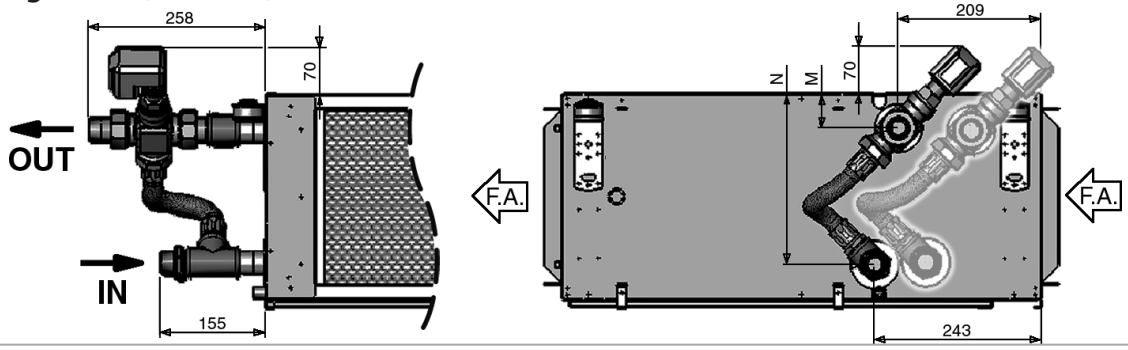

Right configuration (on demand)

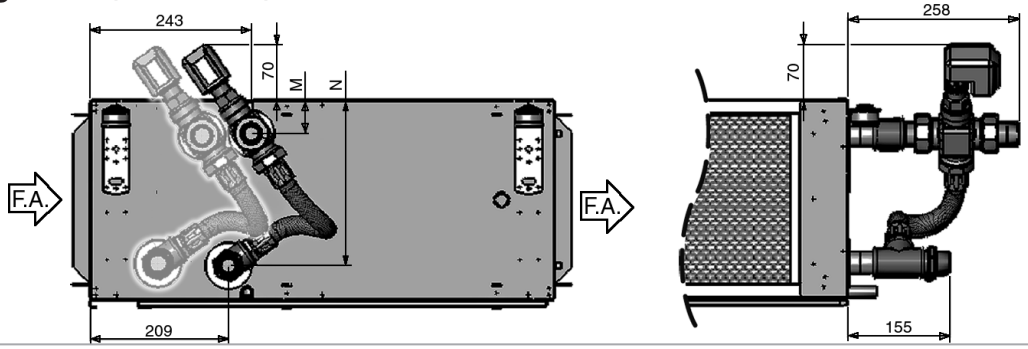

99A4340170L 11/2024